NONRESIDENT
TRAINING
COURSE

SEPTEMBER 1998

Navy Electricity and Electronics Training Series

Module 7—Introduction to Solid-State Devices and Power Supplies

NAVEDTRA 14179

DISTRIBUTION STATEMENT A: Approved for public release; distribution is unlimited.

Although the words “he,” “him,” and “his” are used sparingly in this course to enhance communication, they are not intended to be gender driven or to affront or discriminate against anyone.

DISTRIBUTION STATEMENT A: Approved for public release; distribution is unlimited.

PREFACE

By enrolling in this self-study course, you have demonstrated a desire to improve yourself and the Navy. Remember, however, this self-study course is only one part of the total Navy training program. Practical experience, schools, selected reading, and your desire to succeed are also necessary to successfully round out a fully meaningful training program.

COURSE OVERVIEW: To introduce the student to the subject of Solid-State Devices and Power Supplies who needs such a background in accomplishing daily work and/or in preparing for further study.

THE COURSE: This self-study course is organized into subject matter areas, each containing learning objectives to help you determine what you should learn along with text and illustrations to help you understand the information. The subject matter reflects day-to-day requirements and experiences of personnel in the rating or skill area. It also reflects guidance provided by Enlisted Community Managers (ECMs) and other senior personnel, technical references, instructions, etc., and either the occupational or naval standards, which are listed in the *Manual of Navy Enlisted Manpower Personnel Classifications and Occupational Standards*, NAVPERS 18068.

THE QUESTIONS: The questions that appear in this course are designed to help you understand the material in the text.

VALUE: In completing this course, you will improve your military and professional knowledge. Importantly, it can also help you study for the Navy-wide advancement in rate examination. If you are studying and discover a reference in the text to another publication for further information, look it up.

1998 Edition Prepared by
FCC(SW) R. Stephen Howard

Published by
NAVAL EDUCATION AND TRAINING
PROFESSIONAL DEVELOPMENT
AND TECHNOLOGY CENTER

NAVSUP Logistics Tracking Number
0504-LP-026-8320

Sailor's Creed

"I am a United States Sailor.

I will support and defend the Constitution of the United States of America and I will obey the orders of those appointed over me.

I represent the fighting spirit of the Navy and those who have gone before me to defend freedom and democracy around the world.

I proudly serve my country's Navy combat team with honor, courage and commitment.

I am committed to excellence and the fair treatment of all."

TABLE OF CONTENTS

CHAPTER **PAGE**

1. Semiconductor Diodes 1-1
2. Transistors 2-1
3. Special Devices 3-1
4. Solid-State Power Supplies 4-1

APPENDIX

I. Glossary AI-1

II. Periodic Table of Elements AII-1

INDEX INDEX-1

NAVY ELECTRICITY AND ELECTRONICS TRAINING SERIES

The Navy Electricity and Electronics Training Series (NEETS) was developed for use by personnel in many electrical- and electronic-related Navy ratings. Written by, and with the advice of, senior technicians in these ratings, this series provides beginners with fundamental electrical and electronic concepts through self-study. The presentation of this series is not oriented to any specific rating structure, but is divided into modules containing related information organized into traditional paths of instruction.

The series is designed to give small amounts of information that can be easily digested before advancing further into the more complex material. For a student just becoming acquainted with electricity or electronics, it is highly recommended that the modules be studied in their suggested sequence. While there is a listing of NEETS by module title, the following brief descriptions give a quick overview of how the individual modules flow together.

Module 1, *Introduction to Matter, Energy, and Direct Current*, introduces the course with a short history of electricity and electronics and proceeds into the characteristics of matter, energy, and direct current (dc). It also describes some of the general safety precautions and first-aid procedures that should be common knowledge for a person working in the field of electricity. Related safety hints are located throughout the rest of the series, as well.

Module 2, *Introduction to Alternating Current and Transformers*, is an introduction to alternating current (ac) and transformers, including basic ac theory and fundamentals of electromagnetism, inductance, capacitance, impedance, and transformers.

Module 3, *Introduction to Circuit Protection, Control, and Measurement*, encompasses circuit breakers, fuses, and current limiters used in circuit protection, as well as the theory and use of meters as electrical measuring devices.

Module 4, *Introduction to Electrical Conductors, Wiring Techniques, and Schematic Reading*, presents conductor usage, insulation used as wire covering, splicing, termination of wiring, soldering, and reading electrical wiring diagrams.

Module 5, *Introduction to Generators and Motors*, is an introduction to generators and motors, and covers the uses of ac and dc generators and motors in the conversion of electrical and mechanical energies.

Module 6, *Introduction to Electronic Emission, Tubes, and Power Supplies*, ties the first five modules together in an introduction to vacuum tubes and vacuum-tube power supplies.

Module 7, *Introduction to Solid-State Devices and Power Supplies*, is similar to module 6, but it is in reference to solid-state devices.

Module 8, *Introduction to Amplifiers*, covers amplifiers.

Module 9, *Introduction to Wave-Generation and Wave-Shaping Circuits*, discusses wave generation and wave-shaping circuits.

Module 10, *Introduction to Wave Propagation, Transmission Lines, and Antennas*, presents the characteristics of wave propagation, transmission lines, and antennas.

Module 11, *Microwave Principles,* explains microwave oscillators, amplifiers, and waveguides.

Module 12, *Modulation Principles,* discusses the principles of modulation.

Module 13, *Introduction to Number Systems and Logic Circuits,* presents the fundamental concepts of number systems, Boolean algebra, and logic circuits, all of which pertain to digital computers.

Module 14, *Introduction to Microelectronics,* covers microelectronics technology and miniature and microminiature circuit repair.

Module 15, *Principles of Synchros, Servos, and Gyros,* provides the basic principles, operations, functions, and applications of synchro, servo, and gyro mechanisms.

Module 16, *Introduction to Test Equipment,* is an introduction to some of the more commonly used test equipments and their applications.

Module 17, *Radio-Frequency Communications Principles,* presents the fundamentals of a radio-frequency communications system.

Module 18, *Radar Principles,* covers the fundamentals of a radar system.

Module 19, *The Technician's Handbook,* is a handy reference of commonly used general information, such as electrical and electronic formulas, color coding, and naval supply system data.

Module 20, *Master Glossary,* is the glossary of terms for the series.

Module 21, *Test Methods and Practices,* describes basic test methods and practices.

Module 22, *Introduction to Digital Computers,* is an introduction to digital computers.

Module 23, *Magnetic Recording,* is an introduction to the use and maintenance of magnetic recorders and the concepts of recording on magnetic tape and disks.

Module 24, *Introduction to Fiber Optics,* is an introduction to fiber optics.

Embedded questions are inserted throughout each module, except for modules 19 and 20, which are reference books. If you have any difficulty in answering any of the questions, restudy the applicable section.

Although an attempt has been made to use simple language, various technical words and phrases have necessarily been included. Specific terms are defined in Module 20, *Master Glossary*.

Considerable emphasis has been placed on illustrations to provide a maximum amount of information. In some instances, a knowledge of basic algebra may be required.

Assignments are provided for each module, with the exceptions of Module 19, *The Technician's Handbook*; and Module 20, *Master Glossary*. Course descriptions and ordering information are in NAVEDTRA 12061, *Catalog of Nonresident Training Courses*.

Throughout the text of this course and while using technical manuals associated with the equipment you will be working on, you will find the below notations at the end of some paragraphs. The notations are used to emphasize that safety hazards exist and care must be taken or observed.

WARNING

AN OPERATING PROCEDURE, PRACTICE, OR CONDITION, ETC., WHICH MAY RESULT IN INJURY OR DEATH IF NOT CAREFULLY OBSERVED OR FOLLOWED.

CAUTION

AN OPERATING PROCEDURE, PRACTICE, OR CONDITION, ETC., WHICH MAY RESULT IN DAMAGE TO EQUIPMENT IF NOT CAREFULLY OBSERVED OR FOLLOWED.

NOTE

An operating procedure, practice, or condition, etc., which is essential to emphasize.

INSTRUCTIONS FOR TAKING THE COURSE

ASSIGNMENTS

The text pages that you are to study are listed at the beginning of each assignment. Study these pages carefully before attempting to answer the questions. Pay close attention to tables and illustrations and read the learning objectives. The learning objectives state what you should be able to do after studying the material. Answering the questions correctly helps you accomplish the objectives.

SELECTING YOUR ANSWERS

Read each question carefully, then select the BEST answer. You may refer freely to the text. The answers must be the result of your own work and decisions. You are prohibited from referring to or copying the answers of others and from giving answers to anyone else taking the course.

SUBMITTING YOUR ASSIGNMENTS

To have your assignments graded, you must be enrolled in the course with the Nonresident Training Course Administration Branch at the Naval Education and Training Professional Development and Technology Center (NETPDTC). Following enrollment, there are two ways of having your assignments graded: (1) use the Internet to submit your assignments as you complete them, or (2) send all the assignments at one time by mail to NETPDTC.

Grading on the Internet: Advantages to Internet grading are:

- you may submit your answers as soon as you complete an assignment, and
- you get your results faster; usually by the next working day (approximately 24 hours).

In addition to receiving grade results for each assignment, you will receive course completion confirmation once you have completed all the assignments. To submit your assignment answers via the Internet, go to:

http://courses.cnet.navy.mil

Grading by Mail: When you submit answer sheets by mail, send all of your assignments at one time. Do NOT submit individual answer sheets for grading. Mail all of your assignments in an envelope, which you either provide yourself or obtain from your nearest Educational Services Officer (ESO). Submit answer sheets to:

COMMANDING OFFICER
NETPDTC N331
6490 SAUFLEY FIELD ROAD
PENSACOLA FL 32559-5000

Answer Sheets: All courses include one "scannable" answer sheet for each assignment. These answer sheets are preprinted with your SSN, name, assignment number, and course number. Explanations for completing the answer sheets are on the answer sheet.

Do not use answer sheet reproductions: Use only the original answer sheets that we provide—reproductions will not work with our scanning equipment and cannot be processed.

Follow the instructions for marking your answers on the answer sheet. Be sure that blocks 1, 2, and 3 are filled in correctly. This information is necessary for your course to be properly processed and for you to receive credit for your work.

COMPLETION TIME

Courses must be completed within 12 months from the date of enrollment. This includes time required to resubmit failed assignments.

PASS/FAIL ASSIGNMENT PROCEDURES

If your overall course score is 3.2 or higher, you will pass the course and will not be required to resubmit assignments. Once your assignments have been graded you will receive course completion confirmation.

If you receive less than a 3.2 on any assignment and your overall course score is below 3.2, you will be given the opportunity to resubmit failed assignments. **You may resubmit failed assignments only once.** Internet students will receive notification when they have failed an assignment--they may then resubmit failed assignments on the web site. Internet students may view and print results for failed assignments from the web site. Students who submit by mail will receive a failing result letter and a new answer sheet for resubmission of each failed assignment.

COMPLETION CONFIRMATION

After successfully completing this course, you will receive a letter of completion.

ERRATA

Errata are used to correct minor errors or delete obsolete information in a course. Errata may also be used to provide instructions to the student. If a course has an errata, it will be included as the first page(s) after the front cover. Errata for all courses can be accessed and viewed/downloaded at:

http://www.advancement.cnet.navy.mil

STUDENT FEEDBACK QUESTIONS

We value your suggestions, questions, and criticisms on our courses. If you would like to communicate with us regarding this course, we encourage you, if possible, to use e-mail. If you write or fax, please use a copy of the Student Comment form that follows this page.

For subject matter questions:

E-mail: n315.products@cnet.navy.mil
Phone: Comm: (850) 452-1001, ext. 1728
DSN: 922-1001, ext. 1728
FAX: (850) 452-1370
(Do not fax answer sheets.)
Address: COMMANDING OFFICER
NETPDTC N315
6490 SAUFLEY FIELD ROAD
PENSACOLA FL 32509-5237

For enrollment, shipping, grading, or completion letter questions

E-mail: fleetservices@cnet.navy.mil
Phone: Toll Free: 877-264-8583
Comm: (850) 452-1511/1181/1859
DSN: 922-1511/1181/1859
FAX: (850) 452-1370
(Do not fax answer sheets.)
Address: COMMANDING OFFICER
NETPDTC N331
6490 SAUFLEY FIELD ROAD
PENSACOLA FL 32559-5000

NAVAL RESERVE RETIREMENT CREDIT

If you are a member of the Naval Reserve, you will receive retirement points if you are authorized to receive them under current directives governing retirement of Naval Reserve personnel. For Naval Reserve retirement, this course is evaluated at 6 points. (Refer to *Administrative Procedures for Naval Reservists on Inactive Duty*, BUPERSINST 1001.39, for more information about retirement points.)

Student Comments

Course Title: *NEETS Module 7*
Introduction to Solid-State Devices and Power Supplies

NAVEDTRA: 14179 **Date**: _____

We need some information about you:

Rate/Rank and Name: _____ SSN: _____ Command/Unit _____

Street Address: _____ City: _____ State/FPO: _____ Zip _____

Your comments, suggestions, etc.:

Privacy Act Statement: Under authority of Title 5, USC 301, information regarding your military status is requested in processing your comments and in preparing a reply. This information will not be divulged without written authorization to anyone other than those within DOD for official use in determining performance.

NETPDTC 1550/41 (Rev 4-00)

CHAPTER 1

SEMICONDUCTOR DIODES

LEARNING OBJECTIVES

Learning objectives are stated at the beginning of each chapter. These learning objectives serve as a preview of the information you are expected to learn in the chapter. The comprehensive check questions are based on the objectives. By successfully completing the NRTC, you indicate that you have met the objectives and have learned the information. The learning objective are listed below.

Upon completion of this chapter, you should be able to do the following:

1. State, in terms of energy bands, the differences between a conductor, an insulator, and a semiconductor.
2. Explain the electron and the hole flow theory in semiconductors and how the semiconductor is affected by doping.
3. Define the term "diode" and give a brief description of its construction and operation.
4. Explain how the diode can be used as a half-wave rectifier and as a switch.
5. Identify the diode by its symbology, alphanumerical designation, and color code.
6. List the precautions that must be taken when working with diodes and describe the different ways to test them.

INTRODUCTION TO SOLID-STATE DEVICES

As you recall from previous studies in this series, semiconductors have electrical properties somewhere between those of insulators and conductors. The use of semiconductor materials in electronic components is not new; some devices are as old as the electron tube. Two of the most widely known semiconductors in use today are the JUNCTION DIODE and TRANSISTOR. These semiconductors fall under a more general heading called solid-state devices. A SOLID-STATE DEVICE is nothing more than an electronic device, which operates by virtue of the movement of electrons within a solid piece of semiconductor material.

Since the invention of the transistor, solid-state devices have been developed and improved at an unbelievable rate. Great strides have been made in the manufacturing techniques, and there is no foreseeable limit to the future of these devices. Solid-state devices made from semiconductor materials offer compactness, efficiency, ruggedness, and versatility. Consequently, these devices have invaded virtually every field of science and industry. In addition to the junction diode and transistor, a whole new family of related devices has been developed: the ZENER DIODE, LIGHT-EMITTING DIODE, FIELD EFFECT TRANSISTOR, etc. One development that has dominated solid-state technology, and probably has had a greater impact on the electronics industry than either the electron tube or transistor, is the INTEGRATED CIRCUIT. The integrated circuit is a minute piece of semiconductor material that can produce complete electronic circuit functions.

As the applications of solid-state devices mount, the need for knowledge of these devices becomes increasingly important. Personnel in the Navy today will have to understand solid-state devices if they are to become proficient in the repair and maintenance of electronic equipment. Therefore, our objective in this module is to provide a broad coverage of solid-state devices and, as a broad application, power supplies. We will begin our discussion with some background information on the development of the semiconductor. We will then proceed to the semiconductor diode, the transistor, special devices and, finally, solid-state power supplies.

SEMICONDUCTOR DEVELOPMENT

Although the semiconductor was late in reaching its present development, its story began long before the electron tube. Historically, we can go as far back as 1883 when Michael Faraday discovered that silver sulfide, a semiconductor, has a negative temperature coefficient. The term *negative temperature coefficient* is just another way of saying its resistance to electrical current flow decreases as temperature increases. The opposite is true of the conductor. It has a positive temperature coefficient. Because of this particular characteristic, semiconductors are used extensively in power-measuring equipment.

Only 2 years later, another valuable characteristic was reported by Munk A. Rosenshold. He found that certain materials have rectifying properties. Strange as it may seem, his finding was given such little notice that it had to be rediscovered 39 years later by F. Braun.

Toward the close of the 19th century, experimenters began to notice the peculiar characteristics of the chemical element SELENIUM. They discovered that in addition to its rectifying properties (the ability to convert ac into dc), selenium was also light sensitive-its resistance decreased with an increase in light intensity. This discovery eventually led to the invention of the photophone by Alexander Graham Bell. The photophone, which converted variations of light into sound, was a predecessor of the radio receiver; however, it wasn't until the actual birth of radio that selenium was used to any extent. Today, selenium is an important and widely used semiconductor.

Many other materials were tried and tested for use in communications. SILICON was found to be the most stable of the materials tested while GALENA, a crystalline form of lead sulfide, was found the most sensitive for use in early radio receivers. By 1915, Carl Beredicks discovered that GERMANIUM, another metallic element, also had rectifying capabilities. Later, it became widely used in electronics for low-power, low-frequency applications.

Although the semiconductor was known long before the electron tube was invented, the semiconductor devices of that time could not match the performance of the tube. Radio needed a device that could not only handle power and amplify but rectify and detect a signal as well. Since tubes could do all these things, whereas semiconductor devices of that day could not, the semiconductor soon lost out.

It wasn't until the beginning of World War II that interest was renewed in the semiconductor. There was a dire need for a device that could work within the ultra-high frequencies of radar. Electron tubes had interelectrode capacitances that were too high to do the job. The point-contact semiconductor diode, on the other hand, had a very low internal capacitance. Consequently, it filled the bill; it could be designed to work within the ultra-high frequencies used in radar, whereas the electron tube could not.

As radar took on greater importance and communication-electronic equipment became more sophisticated, the demands for better solid-state devices mounted. The limitations of the electron tube made necessary a quest for something new and different. An amplifying device was needed that was smaller, lighter, more efficient, and capable of handling extremely high frequencies. This was asking a

lot, but if progress was to be made, these requirements had to be met. A serious study of semiconductor materials began in the early 1940's and has continued since.

In June 1948, a significant breakthrough took place in semiconductor development. This was the discovery of POINT-CONTACT TRANSISTOR. Here at last was a semiconductor that could amplify. This discovery brought the semiconductor back into competition with the electron tube. A year later, JUNCTION DIODES and TRANSISTORS were developed. The junction transistor was found superior to the point-contact type in many respects. By comparison, the junction transistor was more reliable, generated less noise, and had higher power-handling ability than its point-contact brother. The junction transistor became a rival of the electron tube in many uses previously uncontested.

Semiconductor diodes were not to be slighted. The initial work of Dr. Carl Zener led to the development of ZENER DIODE, which is frequently used today to regulate power supply voltages at precise levels. Considerably more interest in the solid-state diode was generated when Dr. Leo Esaki, a Japanese scientist, fabricated a diode that could amplify. The device, named the TUNNEL DIODE, has amazing gain and fast switching capabilities. Although it is used in the conventional amplifying and oscillating circuits, its primary use is in computer logic circuits.

Another breakthrough came in the late 1950's when it was discovered that semiconductor materials could be combined and treated so that they functioned as an entire circuit or subassembly rather than as a circuit component. Many names have been given to this solid-circuit concept, such as INTEGRATED CIRCUITS, MICROELECTRONICS, and MICROCIRCUITRY.

So as we see, in looking back, that the semiconductor is not something new, but it has come a long way in a short time.

Q1. What is a solid-state device?

Q2. Define the term negative temperature coefficient.

SEMICONDUCTOR APPLICATIONS

In the previous paragraphs, we mentioned just a few of the many different applications of semiconductor devices. The use of these devices has become so widespread that it would be impossible to list all their different applications. Instead, a broad coverage of their specific application is presented.

Semiconductor devices are all around us. They can be found in just about every commercial product we touch, from the family car to the pocket calculator. Semiconductor devices are contained in television sets, portable radios, stereo equipment, and much more.

Science and industry also rely heavily on semiconductor devices. Research laboratories use these devices in all sorts of electronic instruments to perform tests, measurements, and numerous other experimental tasks. Industrial control systems (such as those used to manufacture automobiles) and automatic telephone exchanges also use semiconductors. Even today heavy-duty versions of the solid-state rectifier diode are being use to convert large amounts of power for electric railroads. Of the many different applications for solid-state devices, space systems, computers, and data processing equipment are some of the largest consumers.

The various types of modem military equipment are literally loaded with semiconductor devices. Many radars, communication, and airborne equipment are transistorized. Data display systems, data processing units, computers, and aircraft guidance-control assemblies are also good examples of

electronic equipments that use semiconductor devices. All of the specific applications of semiconductor devices would make a long impressive list. The fact is, semiconductors are being used extensively in commercial products, industry, and the military.

SEMICONDUCTOR COMPETITION

It should not be difficult to conclude, from what you already know, that semiconductor devices can and do perform all the conventional functions of rectification, amplification, oscillation, timing, switching, and sensing. Simply stated, these devices perform the same basic functions as the electron tube; but they perform more efficiently, economically, and for a longer period of time. Therefore, it should be no surprise to you to see these devices used in place of electron tubes. Keeping this in mind, we see that it is only natural and logical to compare semiconductor devices with electron tubes.

Physically, semiconductor devices are much smaller than tubes. You can see in figure 1-1 that the difference is quite evident. This illustration shows some commonly used tube sizes alongside semiconductor devices of similar capabilities. The reduction in size can be as great as 100:1 by weight and 1000:1 by volume. It is easy to see that size reduction favors the semiconductor device. Therefore, whenever miniaturization is required or is convenient, transistors are favored over tubes. Bear in mind, however, that the extent of practical size reduction is a big factor; many things must be considered. Miniature electron tubes, for example, may be preferred in certain applications to transistors, thus keeping size reduction to a competitive area.

Figure 1-1.—Size comparisons of electron tubes and semiconductors.

Power is also a two-sided story. For low-power applications, where efficiency is a significant factor, semiconductors have a decided advantage. This is true mainly because semiconductor devices perform very well with an extremely small amount of power; in addition, they require no filaments or heaters as in the case of the electron tube. For example, a computer operating with over 4000 solid-state devices may require no more than 20 watts of power. However, the same number of tubes would require several kilowatts of power.

For high-power applications, it is a different story — tubes have the upper hand. The high-power tube has no equivalent in any semiconductor device. This is because a tube can be designed to operate

with over a thousand volts applied to its plate whereas the maximum allowable voltage for a transistor is limited to about 200 volts (usually 50 volts or less). A tube can also handle thousands of watts of power. The maximum power output for transistor generally ranges from 30 milliwatts to slightly over 100 watts.

When it comes to ruggedness and life expectancy, the tube is still in competition. Design and functional requirements usually dictate the choice of device. However, semiconductor devices are rugged and long-lived. They can be constructed to withstand extreme vibration and mechanical shock. They have been known to withstand impacts that would completely shatter an ordinary electron tube. Although some specially designed tubes render extensive service, the life expectancy of transistors is better than three to four times that of ordinary electronic tubes. There is no known failure mechanism (such as an open filament in a tube) to limit the semiconductor's life. However, semiconductor devices do have some limitations. They are usually affected more by temperature, humidity, and radiation than tubes are.

Q3. Name three of the largest users of semiconductor devices.

Q4. State one requirement of an electron tube, which does not exist for semiconductors, that makes the tube less efficient than the semiconductor.

SEMICONDUCTOR THEORY

To understand why solid-state devices function as they do, we will have to examine closely the composition and nature of semiconductors. This entails theory that is fundamental to the study of solid-state devices.

Rather than beginning with theory, let's first become reacquainted with some of the basic information you studied earlier concerning matter and energy (NEETS, Module 1).

ATOMIC STRUCTURE

The universe, as we know it today, is divided into two parts: matter and energy. Matter, which is our main concern at this time, is anything that occupies space and has weight. Rocks, water, air, automobiles, clothing, and even our own bodies are good examples of matter. From this, we can conclude that matter may be found in any one of three states: SOLIDS, LIQUIDS, and GASES. All matter is composed of either an element or combination of elements. As you know, an element is a substance that cannot be reduced to a simpler form by chemical means. Examples of elements with which you are in contact everyday are iron, gold, silver, copper, and oxygen. At present, there are over 100 known elements of which all matter is composed.

As we work our way down the size scale, we come to the atom, the smallest particle into which an element can be broken down and still retain all its original properties. The atoms of one element, however, differ from the atoms of all other elements. Since there are over 100 known elements, there must be over 100 different atoms, or a different atom for each element.

Now let us consider more than one element at a time. This brings us to the term "compound." A compound is a chemical combination of two or more elements. Water, table salt, ethyl alcohol, and ammonia are all examples of compounds. The smallest part of a compound, which has all the characteristics of the compound, is the molecule. Each molecule contains some of the atoms of each of the elements forming the compound.

Consider sugar, for example. Sugar in general terms is matter, since it occupies space and has weight. It is also a compound because it consists of two or more elements. Take a lump of sugar and crush

it into small particles; each of the particles still retains its original identifying properties of sugar. The only thing that changed was the physical size of the sugar. If we continue this subdividing process by grinding the sugar into a fine power, the results are the same. Even dissolving sugar in water does not change its identifying properties, in spite of the fact that the particles of sugar are now too small to be seen even with a microscope. Eventually, we end up with a quantity of sugar that cannot be further divided without its ceasing to be sugar. This quantity is known as a molecule of sugar. If the molecule is further divided, it is found to consist of three simpler kinds of matter: carbon, hydrogen, and oxygen. These simpler forms are called elements. Therefore, since elements consist of atoms, then a molecule of sugar is made up of atoms of carbon, hydrogen, and oxygen.

As we investigate the atom, we find that it is basically composed of electrons, protons, and neutrons. Furthermore, the electrons, protons, and neutrons of one element are identical to those of any other element. There are different kinds of elements because the number and the arrangement of electrons and protons are different for each element.

The electron carries a small negative charge of electricity. The proton carries a positive charge of electricity equal and opposite to the charge of the electron. Scientists have measured the mass and size of the electron and proton, and they know how much charge each possesses. Both the electron and proton have the same quantity of charge, although the mass of the proton is approximately 1,827 times that of the electron. In some atoms there exists a neutral particle called a neutron. The neutron has a mass approximately equal to that of a proton, but it has no electrical charge.

According to theory, the electrons, protons, and neutrons of the atoms are thought to be arranged in a manner similar to a miniature solar system. Notice the helium atom in figure 1-2. Two protons and two neutrons form the heavy nucleus with a positive charge around which two very light electrons revolve. The path each electron takes around the nucleus is called an orbit. The electrons are continuously being acted upon in their orbits by the force of attraction of the nucleus. To maintain an orbit around the nucleus, the electrons travel at a speed that produces a counterforce equal to the attraction force of the nucleus. Just as energy is required to move a space vehicle away from the earth, energy is also required to move an electron away from the nucleus. Like a space vehicle, the electron is said to be at a higher energy level when it travels a larger orbit. Scientific experiments have shown that the electron requires a certain amount of energy to stay in orbit. This quantity is called the electron's energy level. By virtue of just its motion alone, the electron contains kinetic energy. Because of its position, it also contains potential energy. The total energy contained by an electron (kinetic energy plus potential energy) is the main factor that determines the radius of the electron's orbit. For an electron to remain in this orbit, it must neither gain nor lose energy.

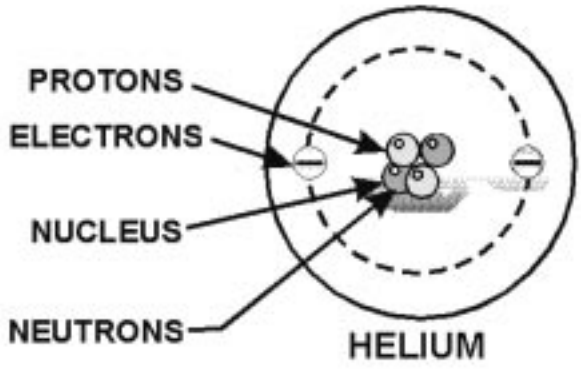

Figure 1-2.—The composition of a simple helium atom.

The orbiting electrons do not follow random paths, instead they are confined to definite energy levels. Visualize these levels as shells with each successive shell being spaced a greater distance from the nucleus. The shells, and the number of electrons required to fill them, may be predicted by using Pauli's exclusion principle. Simply stated, this principle specifies that each shell will contain a maximum of $2n^2$ electrons, where n corresponds to the shell number starting with the one closest to the nucleus. By this principle, the second shell, for example, would contain $2(2)^2$ or 8 electrons when full.

In addition to being numbered, the shells are also given letter designations starting with the shell closest to the nucleus and progressing outward as shown in figure 1-3. The shells are considered to be full, or complete, when they contain the following quantities of electrons: 2 in the K(1st) shell, 8 in the L(2nd) shell, 18 in the M(3rd) shell, and so on, in accordance with the exclusion principle. Each of these shells is a major shell and can be divided into subshells, of which there are four, labeled s, p, d, and f. Like the major shells, the subshells are also limited as to the number of electrons they contain. Thus, the "s" subshell is complete when it contains 2 electrons, the "p" subshell when it contains 6, the "d" subshell when it contains 10, and the "f" subshell when it contains 14 electrons.

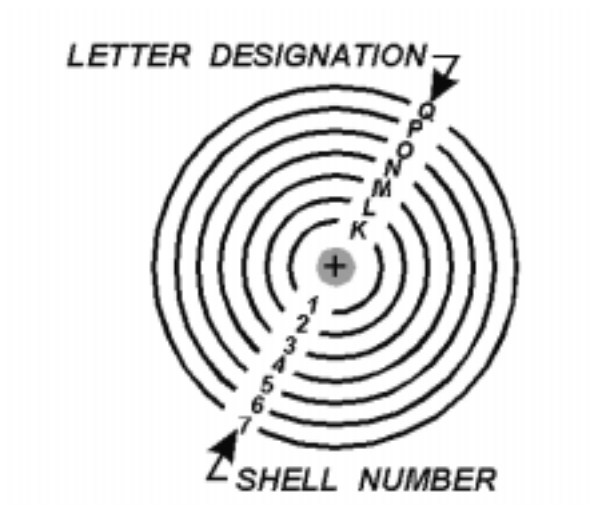

Figure 1-3.—Shell designation.

Inasmuch as the K shell can contain no more than 2 electrons, it must have only one subshell, the s subshell. The M shell is composed of three subshells: s, p, and d. If the electrons in the s, p, and d subshells are added together, their total is found to be 18, the exact number required to fill the M shell. Notice the electron configuration of copper illustrated in figure 1-4. The copper atom contains 29 electrons, which completely fill the first three shells and subshells, leaving one electron in the "s" subshell of the N shell. A list of all the other known elements, with the number of electrons in each atom, is contained in the PERIODIC TABLE OF ELEMENTS. The periodic table of elements is included in appendix 2.

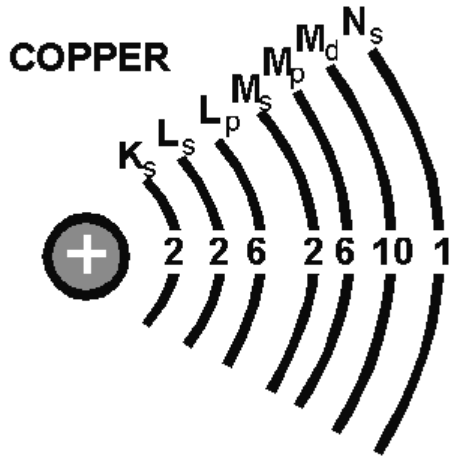

Figure 1-4.—Copper atom.

Valence is an atom's ability to combine with other atoms. The number of electrons in the outermost shell of an atom determines its valence. For this reason, the outer shell of an atom is called VALENCE SHELL, and the electrons contained in this shell are called VALENCE ELECTRONS. The valence of an atom determines its ability to gain or lose an electron, which in turn determines the chemical and electrical properties of the atom. An atom that is lacking only one or two electrons from its outer shell will easily gain electrons to complete its shell, but a large amount of energy is required to free any of its electrons. An atom having a relatively small number of electrons in its outer shell in comparison to the number of electrons required to fill the shell will easily lose these valence electrons. The valence shell always refers to the outermost shell.

Q5. Define matter and list its three different states.

Q6. What is the smallest particle into which an element can be broken down and still retain all its original properties?

Q7. What are the three particles that comprise an atom and state the type of charge they hold?

Q8. What is the outer shell of an atom called?

ENERGY BANDS

Now that you have become reacquainted with matter and energy, we will continue our discussion with electron behavior.

As stated earlier, orbiting electrons contain energy and are confined to definite energy levels. The various shells in an atom represent these levels. Therefore, to move an electron from a lower shell to a higher shell a certain amount of energy is required. This energy can be in the form of electric fields, heat, light, and even bombardment by other particles. Failure to provide enough energy to the electron, even if the energy supplied is just short of the required amount, will cause it to remain at its present energy level. Supplying more energy than is needed will only cause the electron to move to the next higher shell and the remaining energy will be wasted. In simple terms, energy is required in definite units to move electrons from one shell to the next higher shell. These units are called QUANTA (for example 1, 2, or 3 quanta).

Electrons can also lose energy as well as receive it. When an electron loses energy, it moves to a lower shell. The lost energy, in some cases, appears as heat.

If a sufficient amount of energy is absorbed by an electron, it is possible for that electron to be completely removed from the influence of the atom. This is called IONIZATION. When an atom loses electrons or gains electrons in this process of electron exchange, it is said to be ionized. For ionization to take place, there must be a transfer of energy that results in a change in the internal energy of the atom. An atom having more than its normal amount of electrons acquires a negative charge, and is called a NEGATIVE ION. The atom that gives up some of its normal electrons is left with fewer negative charges than positive charges and is called a POSITIVE ION. Thus, we can define ionization as the process by which an atom loses or gains electrons.

Up to this point in our discussion, we have spoken only of isolated atoms. When atoms are spaced far enough apart, as in a gas, they have very little influence upon each other, and are very much like lone atoms. But atoms within a solid have a marked effect upon each other. The forces that bind these atoms together greatly modify the behavior of the other electrons. One consequence of this close proximity of atoms is to cause the individual energy levels of an atom to break up and form bands of energy. Discrete (separate and complete) energy levels still exist within these energy bands, but there are many more energy levels than there were with the isolated atom. In some cases, energy levels will have disappeared. Figure 1-5 shows the difference in the energy arrangement between an isolated atom and the atom in a solid. Notice that the isolated atom (such as in gas) has energy levels, whereas the atom in a solid has energy levels grouped into ENERGY BANDS.

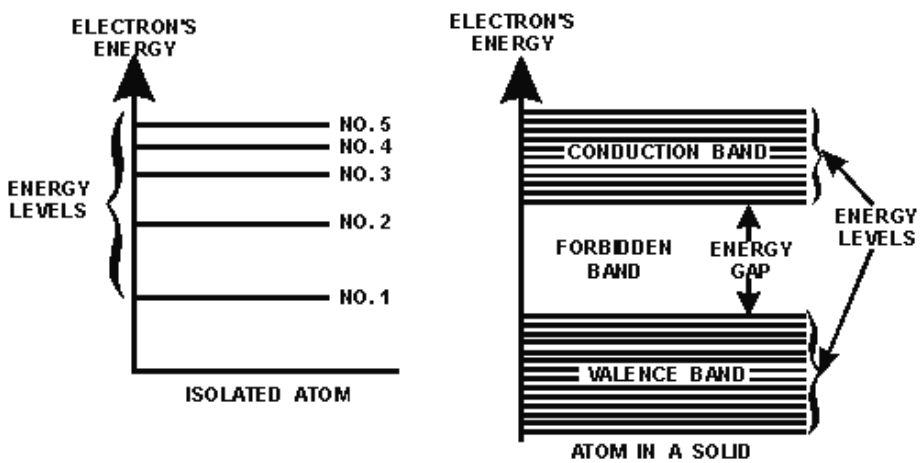

Figure 1-5.—The energy arrangement in atoms.

The upper band in the solid lines in figure 1-5 is called the CONDUCTION BAND because electrons in this band are easily removed by the application of external electric fields. Materials that have a large number of electrons in the conduction band act as good conductors of electricity.

Below the conduction band is the FORBIDDEN BAND or energy gap. Electrons are never found in this band, but may travel back and forth through it, provided they do not come to rest in the band.

The last band or VALENCE BAND is composed of a series of energy levels containing valence electrons. Electrons in this band are more tightly bound to the individual atom than the electrons in the conduction band. However, the electrons in the valence band can still be moved to the conduction band with the application of energy, usually thermal energy. There are more bands below the valence band, but they are not important to the understanding of semiconductor theory and will not be discussed.

The concept of energy bands is particularly important in classifying materials as conductors, semiconductors, and insulators. An electron can exist in either of two energy bands, the conduction band or the valence band. All that is necessary to move an electron from the valence band to the conduction band so it can be used for electric current, is enough energy to carry the electron through the forbidden band. The width of the forbidden band or the separation between the conduction and valence bands determines whether a substance is an insulator, semiconductor, or conductor. Figure 1-6 uses energy level diagrams to show the difference between insulators, semiconductors, and conductors.

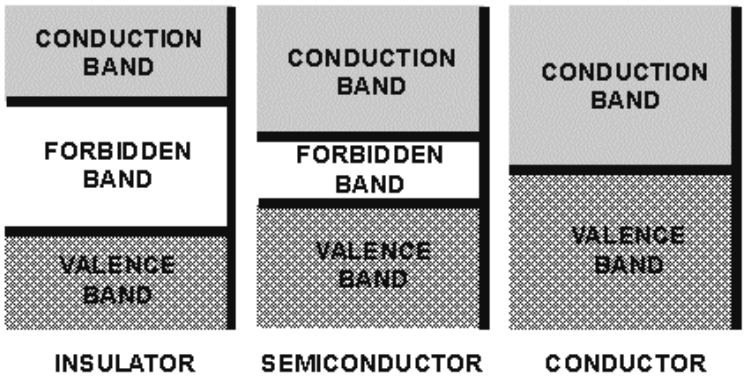

Figure 1-6.—Energy level diagram.

The energy diagram for the insulator shows the insulator with a very wide energy gap. The wider this gap, the greater the amount of energy required to move the electron from the valence band to the conduction band. Therefore, an insulator requires a large amount of energy to obtain a small amount of current. The insulator "insulates" because of the wide forbidden band or energy gap.

The semiconductor, on the other hand, has a smaller forbidden band and requires less energy to move an electron from the valence band to the conduction band. Therefore, for a certain amount of applied voltage, more current will flow in the semiconductor than in the insulator.

The last energy level diagram in figure 1-6 is that of a conductor. Notice, there is no forbidden band or energy gap and the valence and conduction bands overlap. With no energy gap, it takes a small amount of energy to move electrons into the conduction band; consequently, conductors pass electrons very easily.

Q9. What term is used to describe the definite discrete amounts of energy required to move an electron from a low shell to a higher shell?

Q10. What is a negative ion?

Q11. What is the main difference in the energy arrangement between an isolated atom and the atom in a solid?

Q12. What determines, in terms of energy bands, whether a substance is a good insulator, semiconductor, or conductor?

COVALENT BONDING

The chemical activity of an atom is determined by the number of electrons in its valence shell. When the valence shell is complete, the atom is stable and shows little tendency to combine with other atoms to form solids. Only atoms that possess eight valence electrons have a complete outer shell. These atoms are

referred to as inert or inactive atoms. However, if the valence shell of an atom lacks the required number of electrons to complete the shell, then the activity of the atom increases.

Silicon and germanium, for example, are the most frequently used semiconductors. Both are quite similar in their structure and chemical behavior. Each has four electrons in the valence shell. Consider just silicon. Since it has fewer than the required number of eight electrons needed in the outer shell, its atoms will unite with other atoms until eight electrons are shared. This gives each atom a total of eight electrons in its valence shell; four of its own and four that it borrowed from the surrounding atoms. The sharing of valence electrons between two or more atoms produces a COVALENT BOND between the atoms. It is this bond that holds the atoms together in an orderly structure called a CRYSTAL. A crystal is just another name for a solid whose atoms or molecules are arranged in a three-dimensional geometrical pattern commonly referred to as a lattice. Figure 1-7 shows a typical crystal structure. Each sphere in the figure represents the nucleus of an atom, and the arms that join the atoms and support the structure are the covalent bonds.

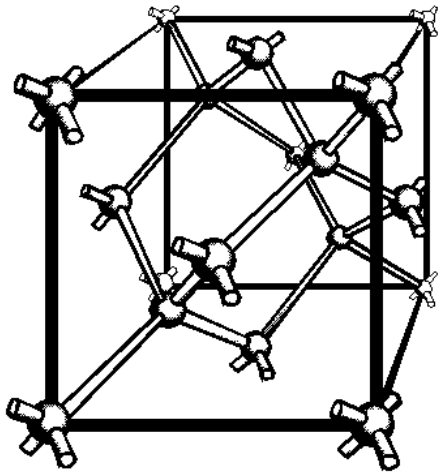

Figure 1-7.—A typical crystal structure.

As a result of this sharing process, the valence electrons are held tightly together. This can best be illustrated by the two-dimensional view of the silicon lattice in figure 1-8. The circles in the figure represent the nuclei of the atoms. The +4 in the circles is the net charge of the nucleus plus the inner shells (minus the valence shell). The short lines indicate valence electrons. Because every atom in this pattern is bonded to four other atoms, the electrons are not free to move within the crystal. As a result of this bonding, pure silicon and germanium are poor conductors of electricity. The reason they are not insulators but semiconductors is that with the proper application of heat or electrical pressure, electrons can be caused to break free of their bonds and move into the conduction band. Once in this band, they wander aimlessly through the crystal.

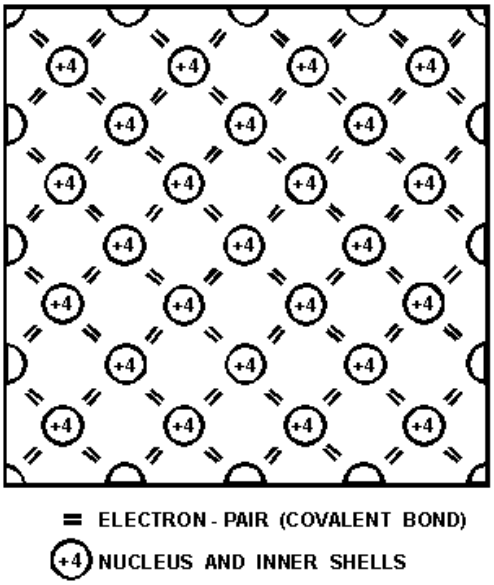

Figure 1-8.—A two-dimensional view of a silicon cubic lattice.

Q13. What determines the chemical activity of an atom?

Q14. What is the term used to describe the sharing of valence electrons between two or more atoms?

CONDUCTION PROCESS

As stated earlier, energy can be added to electrons by applying heat. When enough energy is absorbed by the valence electrons, it is possible for them to break some of their covalent bonds. Once the bonds are broken, the electrons move to the conduction band where they are capable of supporting electric current. When a voltage is applied to a crystal containing these conduction band electrons, the electrons move through the crystal toward the applied voltage. This movement of electrons in a semiconductor is referred to as electron current flow.

There is still another type of current in a pure semiconductor. This current occurs when a covalent bond is broken and a vacancy is left in the atom by the missing valence electron. This vacancy is commonly referred to as a "hole." The hole is considered to have a positive charge because its atom is deficient by one electron, which causes the protons to outnumber the electrons. As a result of this hole, a chain reaction begins when a nearby electron breaks its own covalent bond to fill the hole, leaving another hole. Then another electron breaks its bond to fill the previous hole, leaving still another hole. Each time an electron in this process fills a hole, it enters into a covalent bond. Even though an electron has moved from one covalent bond to another, the most important thing to remember is that the hole is also moving. Therefore, since this process of conduction resembles the movement of holes rather than electrons, it is termed hole flow (short for hole current flow or conduction by holes). Hole flow is very similar to electron flow except that the holes move toward a negative potential and in an opposite direction to that of the electron. Since hole flow results from the breaking of covalent bonds, which are at the valence band level, the electrons associated with this type of conduction contain only valence band energy and must remain in the valence band. However, the electrons associated with electron flow have conduction band energy and can, therefore, move throughout the crystal. A good analogy of hole flow is the movement of a hole through a tube filled with balls (figure 1-9).

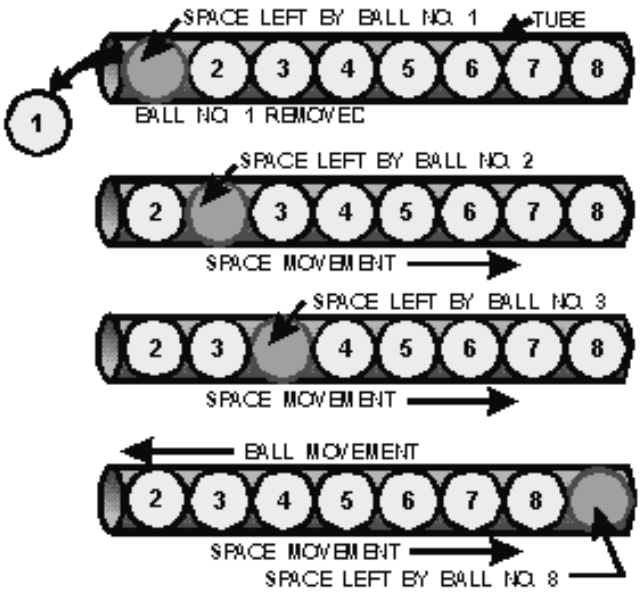

Figure 1-9.—Analogy of hole flow.

When ball number 1 is removed from the tube, a hole is left. This hole is then filled by ball number 2, which leaves still another hole. Ball number 3 then moves into the hole left by ball number 2. This causes still another hole to appear where ball 3 was. Notice the holes are moving to the right side of the tube. This action continues until all the balls have moved one space to the left in which time the hole moved eight spaces to the right and came to rest at the right-hand end of the tube.

In the theory just described, two current carriers were created by the breaking of covalent bonds: the negative electron and the positive hole. These carriers are referred to as electron-hole pairs. Since the semiconductor we have been discussing contains no impurities, the number of holes in the electron-hole pairs is always equal to the number of conduction electrons. Another way of describing this condition where no impurities exist is by saying the semiconductor is INTRINSIC. The term *intrinsic* is also used to distinguish the pure semiconductor that we have been working with from one containing impurities.

Q15. Name the two types of current flow in a semiconductor.

Q16. What is the name given to a piece of pure semiconductor material that has an equal number of electrons and holes?

DOPING PROCESS

The pure semiconductor mentioned earlier is basically neutral. It contains no free electrons in its conduction bands. Even with the application of thermal energy, only a few covalent bonds are broken, yielding a relatively small current flow. A much more efficient method of increasing current flow in semiconductors is by adding very small amounts of selected additives to them, generally no more than a few parts per million. These additives are called impurities and the process of adding them to crystals is referred to as DOPING. The purpose of semiconductor doping is to increase the number of free charges that can be moved by an external applied voltage. When an impurity increases the number of free electrons, the doped semiconductor is NEGATIVE or N TYPE, and the impurity that is added is known as an N-type impurity. However, an impurity that reduces the number of free electrons, causing more

holes, creates a POSITIVE or P-TYPE semiconductor, and the impurity that was added to it is known as a P-type impurity. Semiconductors which are doped in this manner — either with N- or P-type impurities — are referred to as EXTRINSIC semiconductors.

N-Type Semiconductor

The N-type impurity loses its extra valence electron easily when added to a semiconductor material, and in so doing, increases the conductivity of the material by contributing a free electron. This type of impurity has 5 valence electrons and is called a PENTAVALENT impurity. Arsenic, antimony, bismuth, and phosphorous are pentavalent impurities. Because these materials give or donate one electron to the doped material, they are also called DONOR impurities.

When a pentavalent (donor) impurity, like arsenic, is added to germanium, it will form covalent bonds with the germanium atoms. Figure 1-10 illustrates this by showing an arsenic atom (AS) in a germanium (GE) lattice structure. Notice the arsenic atom in the center of the lattice. It has 5 valence electrons in its outer shell but uses only 4 of them to form covalent bonds with the germanium atoms, leaving 1 electron relatively free in the crystal structure. Pure germanium may be converted into an N-type semiconductor by "doping" it with any donor impurity having 5 valence electrons in its outer shell. Since this type of semiconductor (N-type) has a surplus of electrons, the electrons are considered MAJORITY carriers, while the holes, being few in number, are the MINORITY carriers.

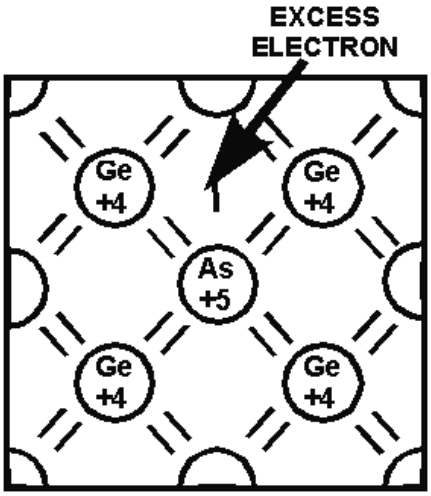

Figure 1-10.—Germanium crystal doped with arsenic.

P-Type Semiconductor

The second type of impurity, when added to a semiconductor material, tends to compensate for its deficiency of 1 valence electron by acquiring an electron from its neighbor. Impurities of this type have only 3 valence electrons and are called TRIVALENT impurities. Aluminum, indium, gallium, and boron are trivalent impurities. Because these materials accept 1 electron from the doped material, they are also called ACCEPTOR impurities.

A trivalent (acceptor) impurity element can also be used to dope germanium. In this case, the impurity is 1 electron short of the required amount of electrons needed to establish covalent bonds with 4 neighboring atoms. Thus, in a single covalent bond, there will be only 1 electron instead of 2. This arrangement leaves a hole in that covalent bond. Figure 1-11 illustrates this theory by showing what happens when germanium is doped with an indium (In) atom. Notice, the indium atom in the figure is 1

electron short of the required amount of electrons needed to form covalent bonds with 4 neighboring atoms and, therefore, creates a hole in the structure. Gallium and boron, which are also trivalent impurities, exhibit these same characteristics when added to germanium. The holes can only be present in this type semiconductor when a trivalent impurity is used. Note that a hole carrier is not created by the removal of an electron from a neutral atom, but is created when a trivalent impurity enters into covalent bonds with a tetravalent (4 valence electrons) crystal structure. The holes in this type of semiconductor (P-type) are considered the MAJORITY carriers since they are present in the material in the greatest quantity. The electrons, on the other hand, are the MINORITY carriers.

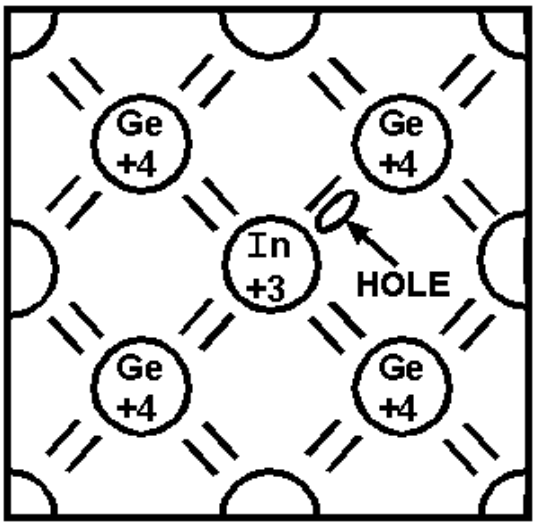

Figure 1-11.—Germanium crystal doped with indium.

Q17. What is the name given to a doped germanium crystal with an excess of free holes?

Q18. What are the majority carriers in an N-type semiconductor?

SEMICONDUCTOR DIODE

If we join a section of N-type semiconductor material with a similar section of P-type semiconductor material, we obtain a device known as a PN JUNCTION. (The area where the N and P regions meet is appropriately called the junction.) The usual characteristics of this device make it extremely useful in electronics as a diode rectifier. The diode rectifier or PN junction diode performs the same function as its counterpart in electron tubes but in a different way. The diode is nothing more than a two-element semiconductor device that makes use of the rectifying properties of a PN junction to convert alternating current into direct current by permitting current flow in only one direction. The schematic symbol of a PN junction diode is shown in figure 1-12. The vertical bar represents the cathode (N-type material) since it is the source of electrons and the arrow represents the anode. (P-type material) since it is the destination of the electrons. The label "CR1" is an alphanumerical code used to identify the diode. In this figure, we have only one diode so it is labeled CR1 (crystal rectifier number one). If there were four diodes shown in the diagram, the last diode would be labeled CR4. The heavy dark line shows electron flow. Notice it is against the arrow. For further clarification, a pictorial diagram of a PN junction and an actual semiconductor (one of many types) are also illustrated.

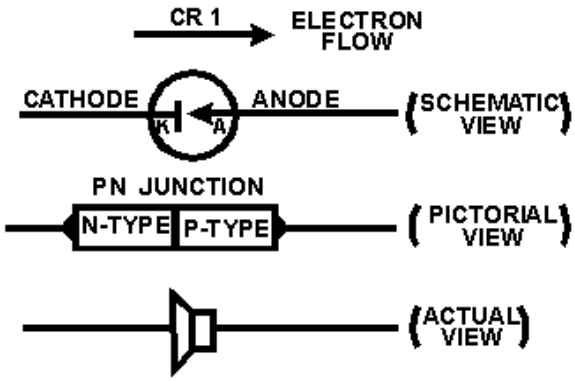

Figure 1-12.—The PN junction diode.

CONSTRUCTION

Merely pressing together a section of P material and a section of N material, however, is not sufficient to produce a rectifying junction. The semiconductor should be in one piece to form a proper PN junction, but divided into a P-type impurity region and an N-type impurity region. This can be done in various ways. One way is to mix P-type and N-type impurities into a single crystal during the manufacturing process. By so doing, a P-region is grown over part of a semiconductor's length and N-region is grown over the other part. This is called a GROWN junction and is illustrated in view A of figure 1-13. Another way to produce a PN junction is to melt one type of impurity into a semiconductor of the opposite type impurity. For example, a pellet of acceptor impurity is placed on a wafer of N-type germanium and heated. Under controlled temperature conditions, the acceptor impurity fuses into the wafer to form a P-region within it, as shown in view B of figure 1-13. This type of junction is known as an ALLOY or FUSED-ALLOY junction, and is one of the most commonly used junctions. In figure 1-14, a POINT-CONTACT type of construction is shown. It consists of a fine metal wire, called a cat whisker, that makes contact with a small area on the surface of an N-type semiconductor as shown in view A of the figure. The PN union is formed in this process by momentarily applying a high-surge current to the wire and the N-type semiconductor. The heat generated by this current converts the material nearest the point of contact to a P-type material (view B).

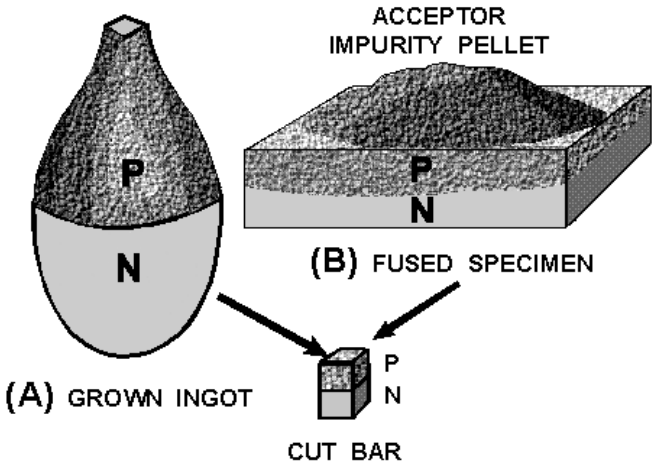

Figure 1-13.—Grown and fused PN junctions from which bars are cut.

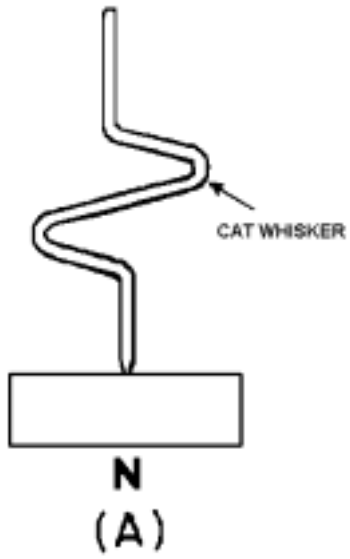

Figure 1-14A.—The point-contact type of diode construction.

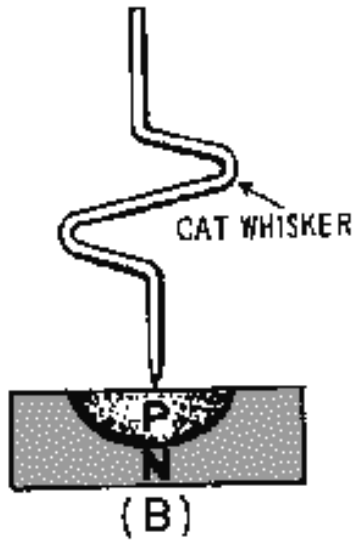

Figure 1-14B.—The point-contact type of diode construction.

Still another process is to heat a section of semiconductor material to near melting and then diffuse impurity atoms into a surface layer. Regardless of the process, the objective is to have a perfect bond everywhere along the union (interface) between P and N materials. Proper contact along the union is important because, as we will see later, the union (junction or interface) is the rectifying agent in the diode.

Q19. What is the purpose of a PN junction diode?

Q20. In reference to the schematic symbol for a diode, do electrons flow toward or away from the arrow?

Q21. What type of PN diode is formed by using a fine metal wire and a section of N-type semiconductor material?

PN JUNCTION OPERATION

Now that you are familiar with P- and N-type materials, how these materials are joined together to form a diode, and the function of the diode, let us continue our discussion with the operation of the PN junction. But before we can understand how the PN junction works, we must first consider current flow in the materials that make up the junction and what happens initially within the junction when these two materials are joined together.

Current Flow in the N-Type Material

Conduction in the N-type semiconductor, or crystal, is similar to conduction in a copper wire. That is, with voltage applied across the material, electrons will move through the crystal just as current would flow in a copper wire. This is shown in figure 1-15. The positive potential of the battery will attract the free electrons in the crystal. These electrons will leave the crystal and flow into the positive terminal of the battery. As an electron leaves the crystal, an electron from the negative terminal of the battery will enter the crystal, thus completing the current path. Therefore, the majority current carriers in the N-type material (electrons) are repelled by the negative side of the battery and move through the crystal toward the positive side of the battery.

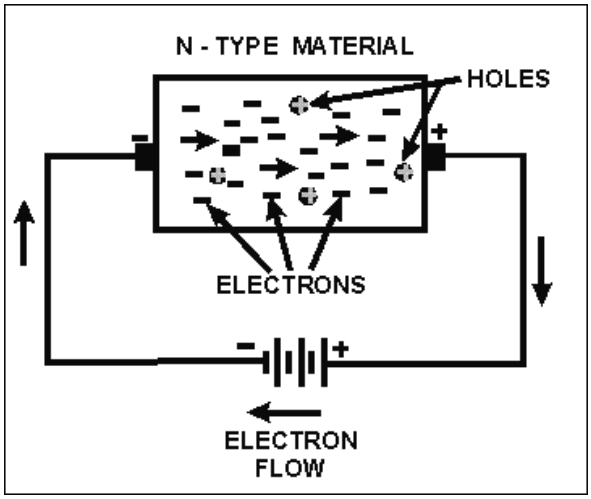

Figure 1-15.—Current flow In the N-type material.

Current Flow in the P-Type Material

Current flow through the P-type material is illustrated in figure 1-16. Conduction in the P material is by positive holes, instead of negative electrons. A hole moves from the positive terminal of the P material to the negative terminal. Electrons from the external circuit enter the negative terminal of the material and fill holes in the vicinity of this terminal. At the positive terminal, electrons are removed from the covalent bonds, thus creating new holes. This process continues as the steady stream of holes (hole current) moves toward the negative terminal.

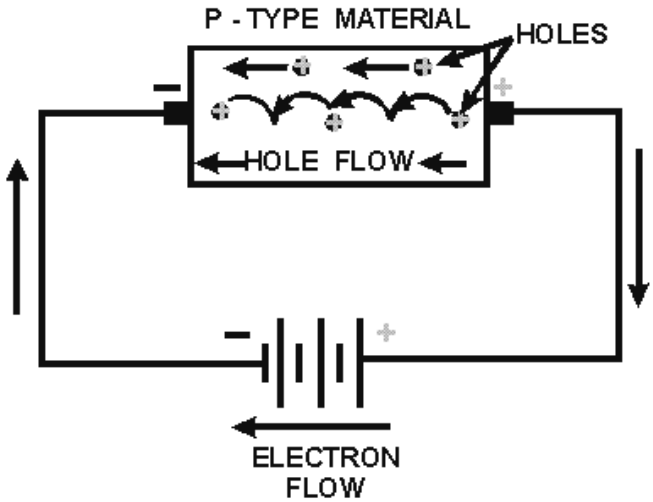

Figure 1-16.—Current flow In the P-type material.

Notice in both N-type and P-type materials, current flow in the external circuit consists of electrons moving out of the negative terminal of the battery and into the positive terminal of the battery. Hole flow, on the other hand, only exists within the material itself.

Q22. What are the majority carriers in a P-type semiconductor?

Q23. Conduction in which type of semiconductor material is similar to conduction in a copper wire?

Junction Barrier

Although the N-type material has an excess of free electrons, it is still electrically neutral. This is because the donor atoms in the N material were left with positive charges after free electrons became available by covalent bonding (the protons outnumbered the electrons). Therefore, for every free electron in the N material, there is a corresponding positively charge atom to balance it. The end result is that the N material has an overall charge of zero.

By the same reasoning, the P-type material is also electrically neutral because the excess of holes in this material is exactly balanced by the number of electrons. Keep in mind that the holes and electrons are still free to move in the material because they are only loosely bound to their parent atoms.

It would seem that if we joined the N and P materials together by one of the processes mentioned earlier, all the holes and electrons would pair up. On the contrary, this does not happen. Instead the electrons in the N material diffuse (move or spread out) across the junction into the P material and fill some of the holes. At the same time, the holes in the P material diffuse across the junction into the N material and are filled by N material electrons. This process, called JUNCTION RECOMBINATION, reduces the number of free electrons and holes in the vicinity of the junction. Because there is a depletion, or lack of free electrons and holes in this area, it is known as the DEPLETION REGION.

The loss of an electron from the N-type material created a positive ion in the N material, while the loss of a hole from the P material created a negative ion in that material. These ions are fixed in place in the crystal lattice structure and cannot move. Thus, they make up a layer of fixed charges on the two sides of the junction as shown in figure 1-17. On the N side of the junction, there is a layer of positively charged ions; on the P side of the junction, there is a layer of negatively charged ions. An electrostatic field, represented by a small battery in the figure, is established across the junction between the oppositely

charged ions. The diffusion of electrons and holes across the junction will continue until the magnitude of the electrostatic field is increased to the point where the electrons and holes no longer have enough energy to overcome it, and are repelled by the negative and positive ions respectively. At this point equilibrium is established and, for all practical purposes, the movement of carriers across the junction ceases. For this reason, the electrostatic field created by the positive and negative ions in the depletion region is called a barrier.

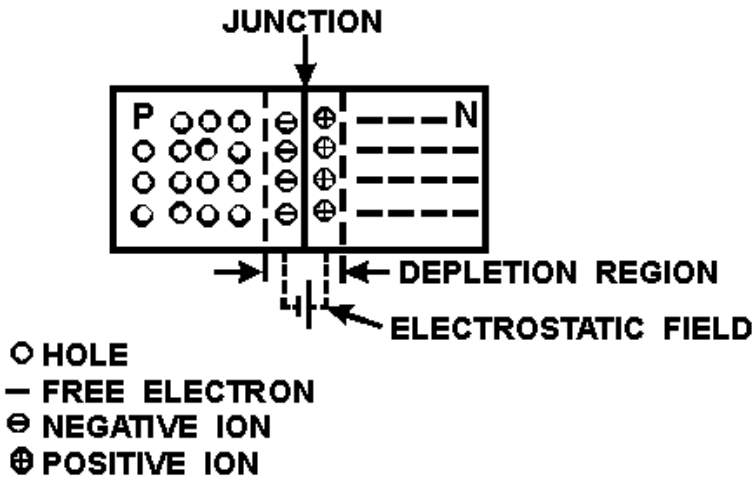

Figure 1-17.—The PN junction barrier formation.

The action just described occurs almost instantly when the junction is formed. Only the carriers in the immediate vicinity of the junction are affected. The carriers throughout the remainder of the N and P material are relatively undisturbed and remain in a balanced condition.

FORWARD BIAS.—An external voltage applied to a PN junction is call BIAS. If, for example, a battery is used to supply bias to a PN junction and is connected so that its voltage opposes the junction field, it will reduce the junction barrier and, therefore, aid current flow through the junction. This type of bias is known as forward bias, and it causes the junction to offer only minimum resistance to the flow of current.

Forward bias is illustrated in figure 1-18. Notice the positive terminal of the bias battery is connected to the P-type material and the negative terminal of the battery is connected to the N-type material. The positive potential repels holes toward the junction where they neutralize some of the negative ions. At the same time the negative potential repels electrons toward the junction where they neutralize some of the positive ions. Since ions on both sides of the barrier are being neutralized, the width of the barrier decreases. Thus, the effect of the battery voltage in the forward-bias direction is to reduce the barrier potential across the junction and to allow majority carriers to cross the junction. Current flow in the forward-biased PN junction is relatively simple. An electron leaves the negative terminal of the battery and moves to the terminal of the N-type material. It enters the N material, where it is the majority carrier and moves to the edge of the junction barrier. Because of forward bias, the barrier offers less opposition to the electron and it will pass through the depletion region into the P-type material. The electron loses energy in overcoming the opposition of the junction barrier, and upon entering the P material, combines with a hole. The hole was produced when an electron was extracted from the P material by the positive potential of the battery. The created hole moves through the P material toward the junction where it combines with an electron.

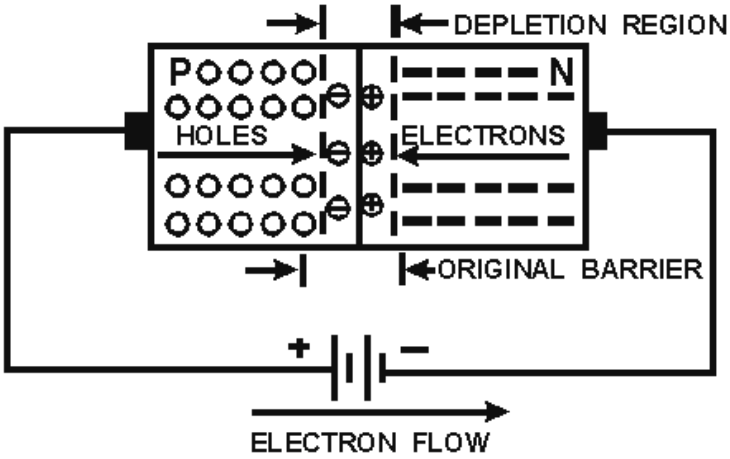

Figure 1-18.—Forward-biased PN junction.

It is important to remember that in the forward biased condition, conduction is by MAJORITY current carriers (holes in the P-type material and electrons in the N-type material). Increasing the battery voltage will increase the number of majority carriers arriving at the junction and will therefore increase the current flow. If the battery voltage is increased to the point where the barrier is greatly reduced, a heavy current will flow and the junction may be damaged from the resulting heat.

REVERSE BIAS.—If the battery mentioned earlier is connected across the junction so that its voltage aids the junction, it will increase the junction barrier and thereby offer a high resistance to the current flow through the junction. This type of bias is known as reverse bias.

To reverse bias a junction diode, the negative battery terminal is connected to the P-type material, and the positive battery terminal to the N-type material as shown in figure 1-19. The negative potential attracts the holes away from the edge of the junction barrier on the P side, while the positive potential attracts the electrons away from the edge of the barrier on the N side. This action increases the barrier width because there are more negative ions on the P side of the junction, and more positive ions on the N side of the junction. Notice in the figure the width of the barrier has increased. This increase in the number of ions prevents current flow across the junction by majority carriers. However, the current flow across the barrier is not quite zero because of the minority carriers crossing the junction. As you recall, when the crystal is subjected to an external source of energy (light, heat, etc.), electron-hole pairs are generated. The electron-hole pairs produce minority current carriers. There are minority current carriers in both regions: holes in the N material and electrons in the P material. With reverse bias, the electrons in the P-type material are repelled toward the junction by the negative terminal of the battery. As the electron moves across the junction, it will neutralize a positive ion in the N-type material. Similarly, the holes in the N-type material will be repelled by the positive terminal of the battery toward the junction. As the hole crosses the junction, it will neutralize a negative ion in the P-type material. This movement of minority carriers is called MINORITY CURRENT FLOW, because the holes and electrons involved come from the electron-hole pairs that are generated in the crystal lattice structure, and not from the addition of impurity atoms.

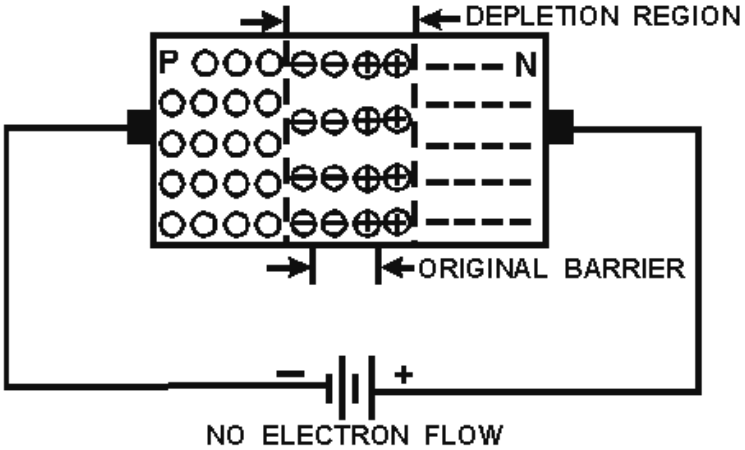

Figure 1-19.—Reverse-biased PN junction.

Therefore, when a PN junction is reverse biased, there will be no current flow because of majority carriers but a very small amount of current because of minority carriers crossing the junction. However, at normal operating temperatures, this small current may be neglected.

In summary, the most important point to remember about the PN junction diode is its ability to offer very little resistance to current flow in the forward-bias direction but maximum resistance to current flow when reverse biased. A good way of illustrating this point is by plotting a graph of the applied voltage versus the measured current. Figure 1-20 shows a plot of this voltage-current relationship (characteristic curve) for a typical PN junction diode.

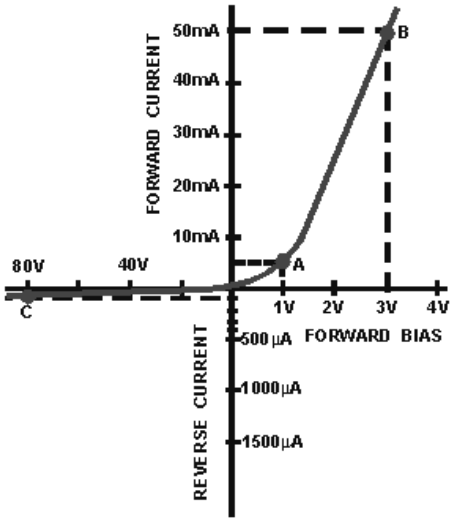

Figure 1-20.—PN junction diode characteristic curve.

To determine the resistance from the curve in this figure we can use Ohm's law:

$$R = \frac{E}{I}$$

For example at point A the forward-bias voltage is 1 volt and the forward-bias current is 5 milliamperes. This represents 200 ohms of resistance (1 volt/5mA = 200 ohms). However, at point B the voltage is 3 volts and the current is 50 milliamperes. This results in 60 ohms of resistance for the diode. Notice that when the forward-bias voltage was tripled (1 volt to 3 volts), the current increased 10 times (5mA to 50 mA). At the same time the forward-bias voltage increased, the resistance decreased from 200 ohms to 60 ohms. In other words, when forward bias increases, the junction barrier gets smaller and its resistance to current flow decreases.

On the other hand, the diode conducts very little when reverse biased. Notice at point C the reverse bias voltage is 80 volts and the current is only 100 microamperes. This results in 800 k ohms of resistance, which is considerably larger than the resistance of the junction with forward bias. Because of these unusual features, the PN junction diode is often used to convert alternating current into direct current (rectification).

Q24. What is the name of the area in a PN junction that has a shortage of electrons and holes?

Q25. In order to reverse bias in a PN junction, what terminal of a battery is connected to the P material?

Q26. What type of bias opposes the PN junction barrier?

PN JUNCTION APPLICATION

Until now, we have mentioned only one application for the diode-rectification, but there are many more applications that we have not yet discussed. Variations in doping agents, semiconductor materials, and manufacturing techniques have made it possible to produce diodes that can be used in many different applications. Examples of these types of diodes are signal diodes, rectifying diodes, Zener diodes (voltage protection diodes for power supplies), varactors (amplifying and switching diodes), and many more. Only applications for two of the most commonly used diodes, the signal diode and rectifier diode, will be presented in this chapter. The other diodes will be explained later on in this module.

Half-Wave Rectifier

One of the most important uses of a diode is rectification. The normal PN junction diode is well-suited for this purpose as it conducts very heavily when forward biased (low-resistance direction) and only slightly when reverse biased (high-resistance direction). If we place this diode in series with a source of ac power, the diode will be forward and reverse biased every cycle. Since in this situation current flows more easily in one direction than the other, rectification is accomplished. The simplest rectifier circuit is a half-wave rectifier (fig. 1-21 view A and view B) which consists of a diode, an ac power source, and a load resister.

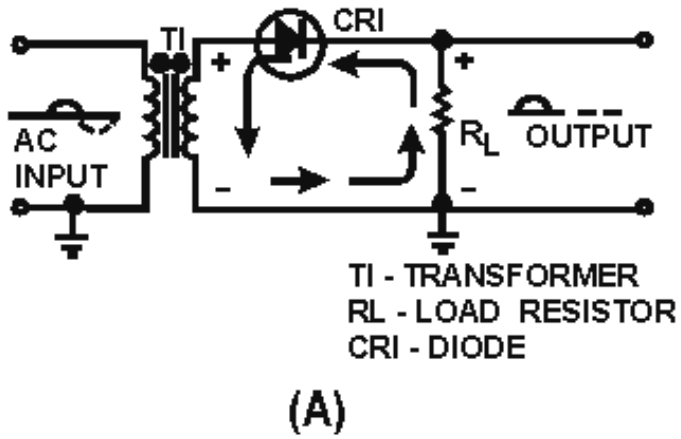

Figure 1-21A.—Simple half-wave rectifier.

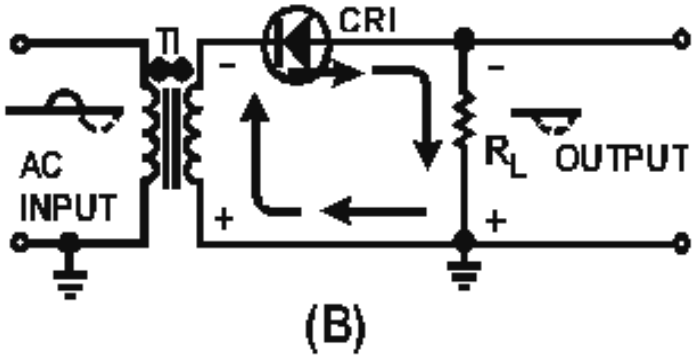

Figure 1-21B.—Simple half-wave rectifier.

The transformer (T1) in the figure provides the ac input to the circuit; the diode (CR1) provides the rectification; and the load resistor (R_L) serves two purposes: it limits the amount of current flow in the circuit to a safe level, and it also develops the output signal because of the current flow through it.

Before describing how this circuit operates, the definition of the word "load" as it applies to power supplies must be understood. Load is defined as <u>any device</u> that <u>draws current</u>. A device that draws little current is considered a light load, whereas a device that draws a large amount of current is a heavy load. Remember that when we speak of "load," we are speaking about the device that draws current from the power source. This device may be a simple resistor, or one or more complicated electronic circuits.

During the positive half-cycle of the input signal (solid line) in figure 1-21 view A, the top of the transformer is positive with respect to ground. The dots on the transformer indicate points of the same polarity. With this condition the diode is forward biased, the depletion region is narrow, the resistance of the diode is low, and current flows through the circuit in the direction of the solid lines. When this current flows through the load resistor, it develops a negative to positive voltage drop across it, which appears as a positive voltage at the output terminal.

When the ac input goes in a negative direction (fig. 1-21 view A), the top of the transformer becomes negative and the diode becomes reverse biased. With reverse bias applied to the diode, the depletion region increases, the resistance of the diode is high, and minimum current flows through the diode. For all

practical purposes, there is no output developed across the load resistor during the negative alternation of the input signal as indicated by the broken lines in the figure. Although only one cycle of input is shown, it should be realized that the action described above continually repeats itself, as long as there is an input. Therefore, since only the positive half-cycles appear at the output this circuit converted the ac input into a positive pulsating dc voltage. The frequency of the output voltage is equal to the frequency of the applied ac signal since there is one pulse out for each cycle of the ac input. For example, if the input frequency is 60 hertz (60 cycles per second), the output frequency is 60 pulses per second (pps).

However, if the diode is reversed as shown in view B of figure 1-21, a negative output voltage would be obtained. This is because the current would be flowing from the top of R_L toward the bottom, making the output at the top of R_L negative with respect to the bottom or ground. Because current flows in this circuit only during half of the input cycle, it is called a <u>half-wave rectifier</u>.

The semiconductor diode shown in the figure can be replaced by a metallic rectifier and still achieve the same results. The metallic rectifier, sometimes referred to as a dry-disc rectifier, is a metal-to-semiconductor, large-area contact device. Its construction is distinctive; a semiconductor is sandwiched between two metal plates, or electrodes, as shown in figure 1-22. Note in the figure that a barrier, with a resistance many times greater than that of the semiconductor material, is constructed on one of the metal electrodes. The contact having the barrier is a rectifying contact; the other contact is nonrectifying. Metallic rectifiers act just like the diodes previously discussed in that they permit current to flow more readily in one direction than the other. However, the metallic rectifier is fairly large compared to the crystal diode as can be seen in figure 1-23. The reason for this is: metallic rectifier units are stacked (to prevent inverse voltage breakdown), have large area plates (to handle high currents), and usually have cooling fins (to prevent overheating).

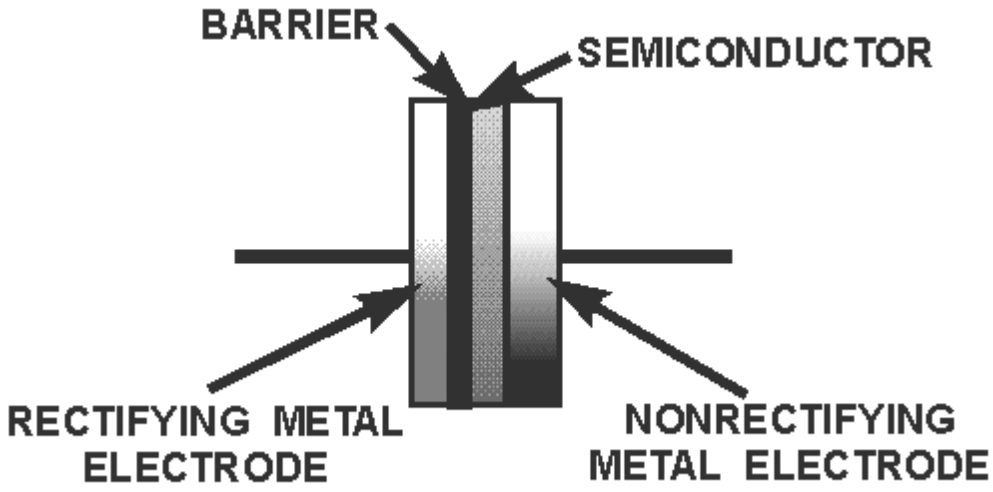

Figure 1-22.—A metallic rectifier.

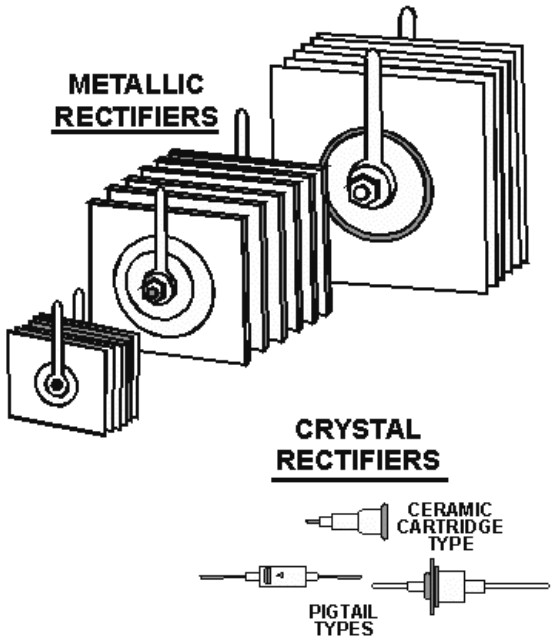

Figure 1-23.—Different types of crystal and metallic rectifiers.

There are many known metal-semiconductor combinations that can be used for contact rectification. Copper oxide and selenium devices are by far the most popular. Copper oxide and selenium are frequently used over other types of metallic rectifiers because they have a large forward current per unit contact area, low forward voltage drop, good stability, and a lower aging rate. In practical application, the selenium rectifier is used where a relatively large amount of power is required. On the other hand, copper-oxide rectifiers are generally used in small-current applications such as ac meter movements or for delivering direct current to circuits requiring not more than 10 amperes.

Since metallic rectifiers are affected by temperature, atmospheric conditions, and aging (in the case of copper oxide and selenium), they are being replaced by the improved silicon crystal rectifier. The silicon rectifier replaces the bulky selenium rectifier as to current and voltage rating, and can operate at higher ambient (surrounding) temperatures.

Diode Switch

In addition to their use as simple rectifiers, diodes are also used in circuits that mix signals together (mixers), detect the presence of a signal (detector), and act as a switch "to open or close a circuit." Diodes used in these applications are commonly referred to as "signal diodes." The simplest application of a signal diode is the basic diode switch shown in figure 1-24.

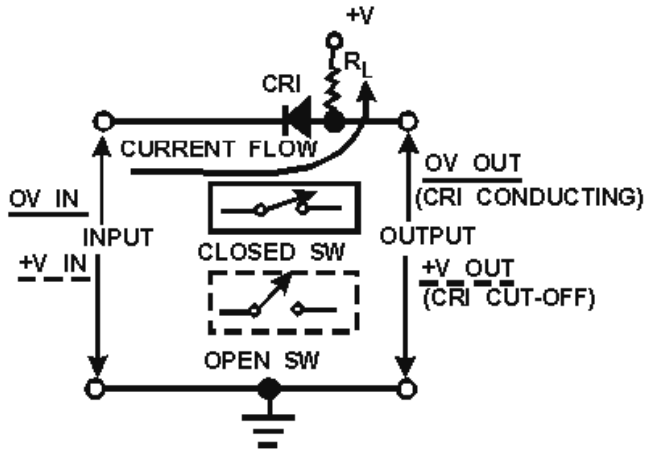

Figure 1-24.—Basic diode switch.

When the input to this circuit is at zero potential, the diode is forward biased because of the zero potential on the cathode and the positive voltage on the anode. In this condition, the diode conducts and acts as a straight piece of wire because of its very low forward resistance. In effect, the input is directly coupled to the output resulting in zero volts across the output terminals. Therefore, the diode, acts as a closed switch when its anode is positive with respect to its cathode.

If we apply a positive input voltage (equal to or greater than the positive voltage supplied to the anode) to the diode's cathode, the diode will be reverse biased. In this situation, the diode is cut off and acts as an open switch between the input and output terminals. Consequently, with no current flow in the circuit, the positive voltage on the diode's anode will be felt at the output terminal. Therefore, the diode acts as an open switch when it is reverse biased.

Q27. What is a load?

Q28. What is the output of a half-wave rectifier?

Q29. What type of rectifier is constructed by sandwiching a section of semiconductor material between two metal plates?

Q30. What type of bias makes a diode act as a closed switch?

DIODE CHARACTERISTICS

Semiconductor diodes have properties that enable them to perform many different electronic functions. To do their jobs, engineers and technicians must be supplied with data on these different types of diodes. The information presented for this purpose is called DIODE CHARACTERISTICS. These characteristics are supplied by manufacturers either in their manuals or on specification sheets (data sheets). Because of the scores of manufacturers and numerous diode types, it is not practical to put before you a specification sheet and call it typical. Aside from the difference between manufacturers, a single manufacturer may even supply specification sheets that differ both in format and content. Despite these differences, certain performance and design information is normally required. We will discuss this information in the next few paragraphs.

A standard specification sheet usually has a brief description of the diode. Included in this description is the type of diode, the major area of application, and any special features. Of particular interest is the specific application for which the diode is suited. The manufacturer also provides a drawing of the diode which gives dimension, weight, and, if appropriate, any identification marks. In addition to the above data, the following information is also provided: a static operating table (giving spot values of parameters under fixed conditions), sometimes a characteristic curve similar to the one in figure 1-20 (showing how parameters vary over the full operating range), and diode ratings (which are the limiting values of operating conditions outside which could cause diode damage).

Manufacturers specify these various diode operating parameters and characteristics with "letter symbols" in accordance with fixed definitions. The following is a list, by letter symbol, of the major electrical characteristics for the rectifier and signal diodes.

RECTIFIER DIODES

DC BLOCKING VOLTAGE [V_R]—the maximum reverse dc voltage that will not cause breakdown.

AVERAGE FORWARD VOLTAGE DROP [$V_{F(AV)}$]—the average forward voltage drop across the rectifier given at a specified forward current and temperature.

AVERAGE RECTIFIER FORWARD CURRENT [$I_{F(AV)}$]—the average rectified forward current at a specified temperature, usually at 60 Hz with a resistive load.

AVERAGE REVERSE CURRENT [$I_{R(AV)}$]—the average reverse current at a specified temperature, usually at 60 Hz.

PEAK SURGE CURRENT [I_{SURGE}]—the peak current specified for a given number of cycles or portion of a cycle.

SIGNAL DIODES

PEAK REVERSE VOLTAGE [PRV]—the maximum reverse voltage that can be applied before reaching the breakdown point. (PRV also applies to the rectifier diode.)

REVERSE CURRENT [I_R]—the small value of direct current that flows when a semiconductor diode has reverse bias.

MAXIMUM FORWARD VOLTAGE DROP AT INDICATED FORWARD CURRENT [V_F@I_F]—the maximum forward voltage drop across the diode at the indicated forward current.

REVERSE RECOVERY TIME [t_{rr}]—the maximum time taken for the forward-bias diode to recover its reverse bias.

The ratings of a diode (as stated earlier) are the limiting values of operating conditions, which if exceeded could cause damage to a diode by either voltage breakdown or overheating. The PN junction diodes are generally rated for: MAXIMUM AVERAGE FORWARD CURRENT, PEAK RECURRENT FORWARD CURRENT, MAXIMUM SURGE CURRENT, and PEAK REVERSE VOLTAGE.

Maximum average forward current is usually given at a special temperature, usually 25º C, (77º F) and refers to the maximum amount of average current that can be permitted to flow in the forward direction. If this rating is exceeded, structure breakdown can occur.

Peak recurrent forward current is the maximum peak current that can be permitted to flow in the forward direction in the form of recurring pulses.

Maximum surge current is the maximum current permitted to flow in the forward direction in the form of nonrecurring pulses. Current should not equal this value for more than a few milliseconds.

Peak reverse voltage (PRV) is one of the most important ratings. PRV indicates the maximum reverse-bias voltage that may be applied to a diode without causing junction breakdown.

All of the above ratings are subject to change with temperature variations. If, for example, the operating temperature is above that stated for the ratings, the ratings must be decreased.

Q31. What is used to show how diode parameters vary over a full operating range?

Q32. What is meant by diode ratings?

DIODE IDENTIFICATION

There are many types of diodes varying in size from the size of a pinhead (used in subminiature circuitry) to large 250-ampere diodes (used in high-power circuits). Because there are so many different types of diodes, some system of identification is needed to distinguish one diode from another. This is accomplished with the semiconductor identification system shown in figure 1-25. This system is not only used for diodes but transistors and many other special semiconductor devices as well. As illustrated in this figure, the system uses numbers and letters to identify different types of semiconductor devices. The first number in the system indicates the number of junctions in the semiconductor device and is a number, one less than the number of active elements. Thus 1 designates a diode; 2 designates a transistor (which may be considered as made up of two diodes); and 3 designates a tetrode (a four-element transistor). The letter "N" following the first number indicates a semiconductor. The 2- or 3-digit number following the letter "N" is a serialized identification number. If needed, this number may contain a suffix letter after the last digit. For example, the suffix letter "M" may be used to describe matching pairs of separate semiconductor devices or the letter "R" may be used to indicate reverse polarity. Other letters are used to indicate modified versions of the device which can be substituted for the basic numbered unit. For example, a semiconductor diode designated as type 1N345A signifies a two-element diode (1) of semiconductor material (N) that is an improved version (A) of type 345.

XNYYY

XN — COMPONENT

YYY — IDENTIFICATION NUMBER

X - NUMBER OF SEMICONDUCTOR JUNCTIONS
N - A SEMICONDUCTOR
YYY - IDENTIFICATION NUMBER (ORDER OR REGISTRATION NUMBER)
ALSO INCLUDES SUFFIX LETTER (IF APPLICABLE) TO INDICATE

1. MATCHING DEVICES
2. REVERSE POLARITY
3. MODIFICATION

EXAMPLE - 1N345A (AN IMPROVED VERSION OF THE SEMICONDUCTOR DIODE TYPE 345)

Figure 1-25.—Semiconductor identification codes.

When working with these different types of diodes, it is also necessary to distinguish one end of the diode from the other (anode from cathode). For this reason, manufacturers generally code the cathode end of the diode with a "k," "+," "cath," a color dot or band, or by an unusual shape (raised edge or taper) as shown in figure 1-26. In some cases, standard color code bands are placed on the cathode end of the diode. This serves two purposes: (1) it identifies the cathode end of the diode, and (2) it also serves to identify the diode by number.

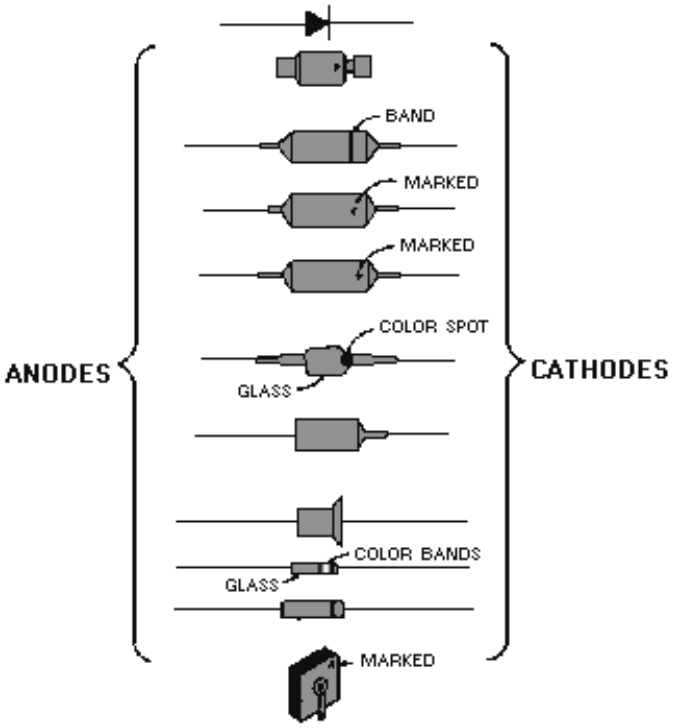

Figure 1-26.—Semiconductor diode markings.

The standard diode color code system is shown in figure 1-27. Take, for example, a diode with brown, orange, and white bands at one terminal and figure out its identification number. With brown

being a "1," orange a "3," and white "9," the device would be identified as a type 139 semiconductor diode, or specifically 1N139.

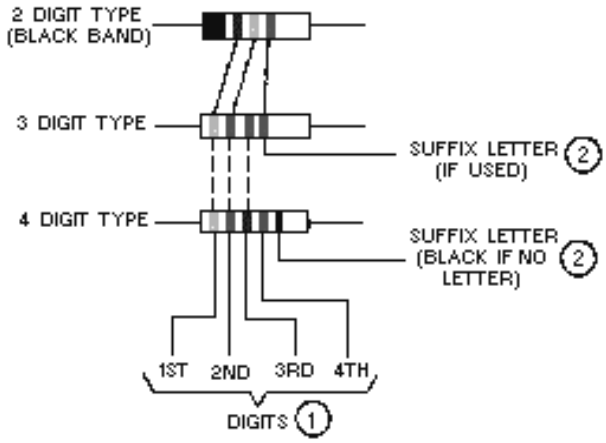

COLOR	1 DIGIT	2 DIODE SUFFIX LETTER
BLACK	0	-
BROWN	1	A
RED	2	B
ORANGE	3	C
YELLOW	4	D
GREEN	5	E
BLUE	6	F
VIOLET	7	G
GRAY	8	H
WHITE	9	J
SILVER	-	-
GOLD	-	-
NONE	-	-

Figure 1-27.—Semiconductor diode color code system.

Keep in mind, whether the diode is a small crystal type or a large power rectifier type, both are still represented schematically, as explained earlier, by the schematic symbol shown in figure 1-12.

Q33. What does the letter "N" indicate in the semiconductor identification system?

Q34. What type of diode has orange, blue, and gray bands?

DIODE MAINTENANCE

Diodes are rugged and efficient. They are also expected to be relatively trouble free. Protective encapsulation processes and special coating techniques have even further increased their life expectancies. In theory, a diode should last indefinitely. However, if diodes are subjected to current overloads, their junctions will be damaged or destroyed. In addition, the application of excessively high operating voltages can damage or destroy junctions through arc-over, or excessive reverse currents. One of the greatest dangers to the diode is heat. Heat causes more electron-hole pairs to be generated, which in turn increases current flow. This increase in current generates more heat and the cycle repeats itself until

the diode draws excessive current. This action is referred to as THERMAL RUNAWAY and eventually causes diode destruction. Extreme caution should be used when working with equipment containing diodes to ensure that these problems do not occur and cause irreparable diode damage.

The following is a list of some of the special safety precautions that should be observed when working with diodes:

- Never remove or insert a diode into a circuit with voltage applied.
- Never pry diodes to loosen them from their circuits.
- Always be careful when soldering to ensure that excessive heat is not applied to the diode.
- When testing a diode, ensure that the test voltage does not exceed the diode's maximum allowable voltage.
- Never put your fingers across a signal diode because the static charge from your body could short it out.
- Always replace a diode with a direct replacement, or with one of the same type.
- Ensure a replacement diode is put into a circuit in the correct direction.

If a diode has been subjected to excessive voltage or temperature and is suspected of being defective, it can be checked in various ways. The most convenient and quickest way of testing a diode is with an ohmmeter (fig. 1-28). To make the check, simply disconnect one of the diode leads from the circuit wiring, and make resistance measurements across the leads of the diode. The resistance measurements obtained depend upon the test-lead polarity of the ohmmeter; therefore, two measurements must be taken. The first measurement is taken with the test leads connected to either end of the diode and the second measurement is taken with the test leads reversed on the diode. The larger resistance value is assumed to be the reverse (back) resistance of the diode, and the smaller resistance (front) value is assumed to be the forward resistance. Measurement can be made for comparison purposes using another identical-type diode (known to be good) as a standard. Two high-value resistance measurements indicate that the diode is open or has a high forward resistance. Two low-value resistance measurements indicate that the diode is shorted or has a low reverse resistance. A normal set of measurements will show a high resistance in the reverse direction and a low resistance in the forward direction. The diode's efficiency is determined by how low the forward resistance is compared with the reverse resistance. That is, it is desirable to have as great a ratio (often known as the front-to-back ratio or the back-to-front ratio) as possible between the reverse and forward resistance measurements. However, as a rule of thumb, a small signal diode will have a ratio of several hundred to one, while a power rectifier can operate satisfactorily with a ratio of 10 to 1.

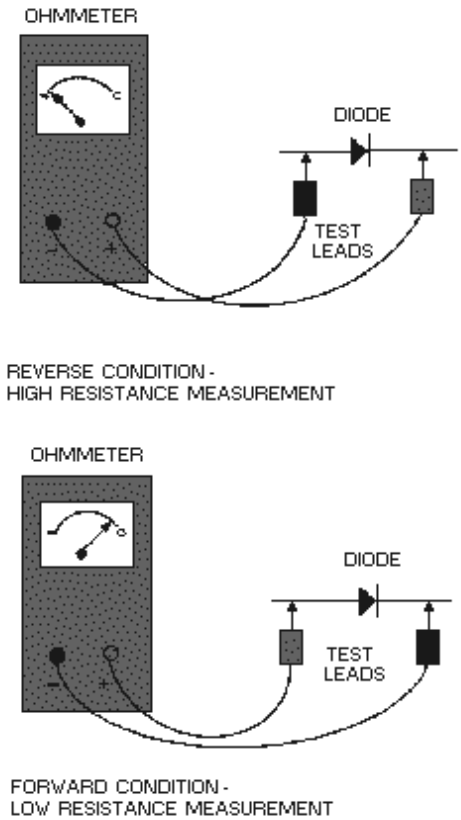

Figure 1-28.—Checking a diode with an ohmmeter.

One thing you should keep in mind about the ohmmeter check-it is not conclusive. It is still possible for a diode to check good under this test, but break down when placed back in the circuit. The problem is that the meter used to check the diode uses a lower voltage than the diode usually operates at in the circuit.

Another important point to remember is that a diode should not be condemned because two ohmmeters give different readings on the diode. This occurs because of the different internal resistances of the ohmmeters and the different states of charge on the ohmmeter batteries. Because each ohmmeter sends a different current through the diode, the two resistance values read on the meters will not be the same.

Another way of checking a diode is with the substitution method. In this method, a good diode is substituted for a questionable diode. This technique should be used only after you have made voltage and resistance measurements to make certain that there is no circuit defect that might damage the substitution diode. If more than one defective diode is present in the equipment section where trouble has been localized, this method becomes cumbersome, since several diodes may have to be replaced before the trouble is corrected. To determine which stages failed and which diodes are not defective, all of the removed diodes must be tested. This can be accomplished by observing whether the equipment operates correctly as each of the removed diodes is reinserted into the equipment.

In conclusion, the only valid check of a diode is a dynamic electrical test that determines the diode's forward current (resistance) and reverse current (resistance) parameters. This test can be accomplished using various crystal diode test sets that are readily available from many manufacturers.

Q35. What is the greatest threat to a diode?

Q36. When checking a diode with an ohmmeter, what is indicated by two high resistance measurements?

SUMMARY

Now that we have completed this chapter, a short review of the more important points covered in the chapter will follow. You should be thoroughly familiar with these points before continuing on to chapter 2.

The **UNIVERSE** consists of two main parts-matter and energy.

MATTER is anything that occupies space and has weight. Rocks, water, and air are examples of matter. Matter may be found in any one of three states: solid, liquid and gaseous. It can also be composed of either an element or a combination of elements.

An **ELEMENT** is a substance that cannot be reduced to a simpler form by chemical means. Iron, gold, silver, copper, and oxygen are all good examples of elements.

A **COMPOUND** is a chemical combination of two or more elements. Water, table salt, ethyl alcohol, and ammonia are all examples of compounds.

A **MOLECULE** is the smallest part of a compound that has all the characteristics of the compound. Each molecule contains some of the atoms of each of the elements forming the compound.

The **ATOM** is the smallest particle into which an element can be broken down and still retain all its original properties. An atom is made up of electrons, protons, and neutrons. The number and arrangement of these particles determine the kind of element.

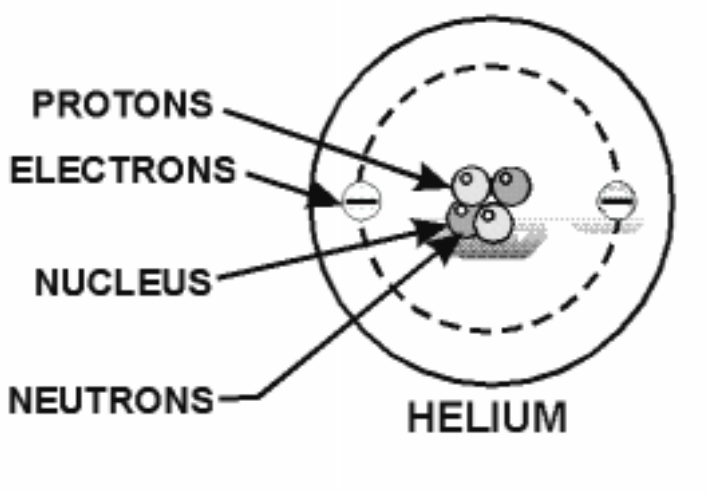

An **ELECTRON** carries a small negative charge of electricity.

The **PROTON** carries a positive charge of electricity that is equal and opposite to the charge of the electron. However, the mass of the proton is approximately 1,837 times that of the electron.

The **NEUTRON** is a neutral particle in that it has no electrical charge. The mass of the neutron is approximately equal to that of the proton.

An **ELECTRON'S ENERGY LEVEL** is the amount of energy required by an electron to stay in orbit. Just by the electron's motion alone, it has kinetic energy. The electron's position in reference to the nucleus gives it potential energy. An energy balance keeps the electron in orbit and as it gains or loses energy, it assumes an orbit further from or closer to the center of the atom.

SHELLS and **SUBSHELLS** are the orbits of the electrons in an atom. Each shell can contain a maximum number of electrons, which can be determined by the formula $2n^2$. Shells are lettered K through Q, starting with K, which is the closest to the nucleus. The shell can also be split into four subshells labeled s, p, d, and f, which can contain 2, 6, 10, and 14 electrons, respectively.

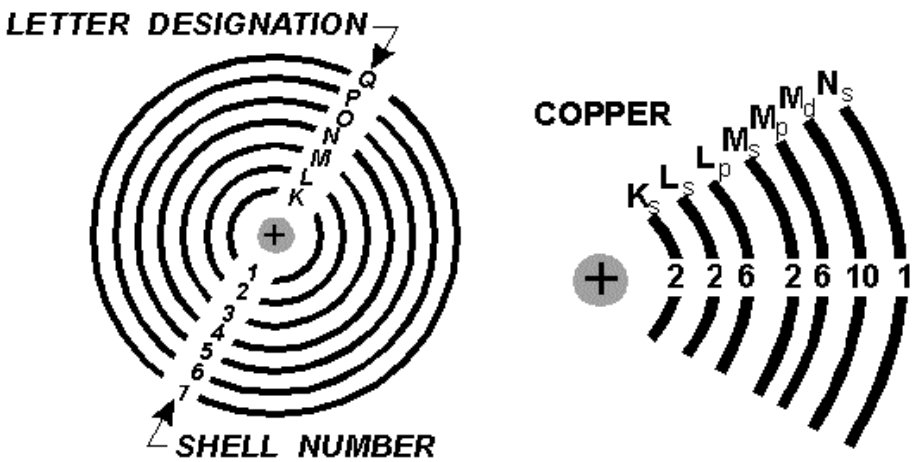

VALENCE is the ability of an atom to combine with other atoms. The valence of an atom is determined by the number of electrons in the atom's outermost shell. This shell is referred to as the VALENCE SHELL. The electrons in the outermost shell are called VALENCE ELECTRONS.

IONIZATION is the process by which an atom loses or gains electrons. An atom that loses some of its electrons in the process becomes positively charged and is called a POSITIVE ION. An atom that has an excess number of electrons is negatively charged and is called a **NEGATIVE ION**.

ENERGY BANDS are groups of energy levels that result from the close proximity of atoms in a solid. The three most important energy bands are the CONDUCTION BAND, FORBIDDEN BAND, and VALENCE BAND.

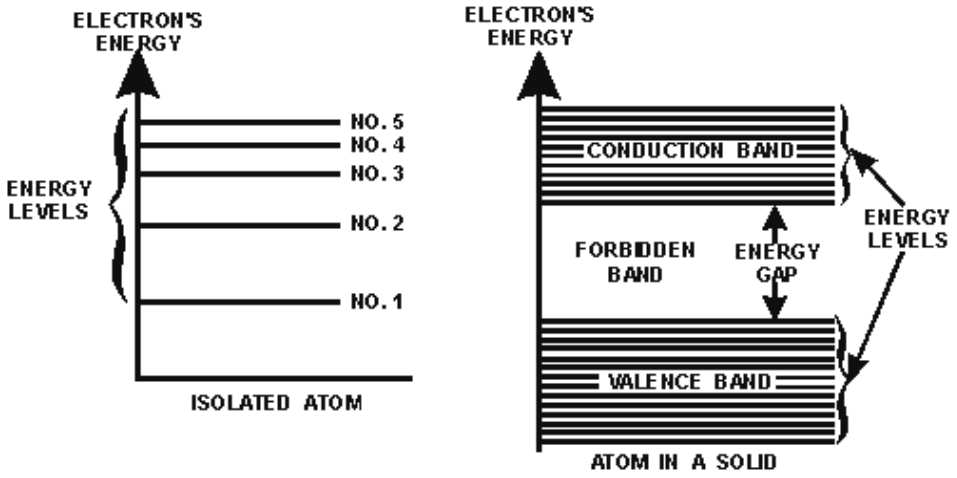

CONDUCTORS, **SEMICONDUCTORS**, and **INSULATORS** are categorized as such by using the energy band concept. It is the width of the forbidden band that determines whether a material is an insulator, a semiconductor, or a conductor. A CONDUCTOR has a very narrow forbidden band or none at all. A SEMICONDUCTOR has a medium width forbidden band. An INSULATOR has a wide forbidden band.

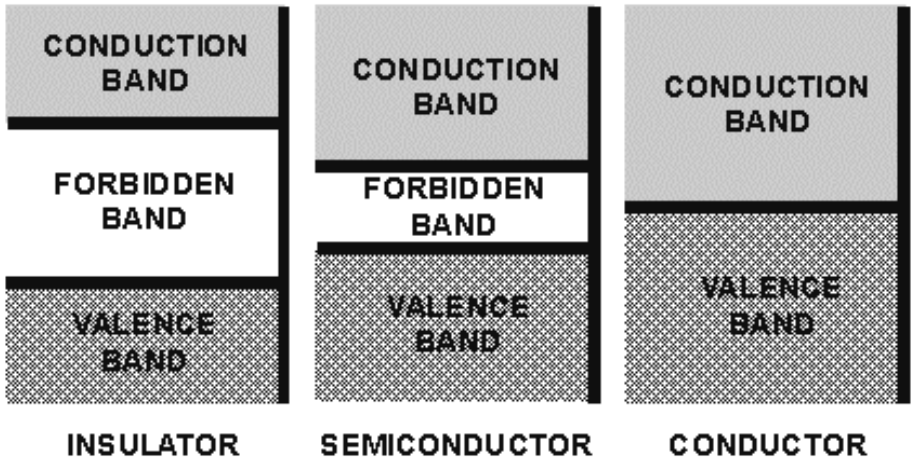

COVALENT BONDING is the sharing of valence electrons between two or more atoms. It is this bonding that holds the atoms together in an orderly structure called a CRYSTAL.

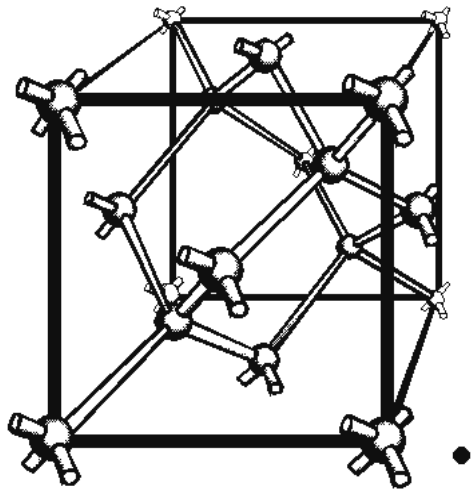

The **CONDUCTION PROCESS** in a **SEMICONDUCTOR** is accomplished by two different types of current flow: **HOLE FLOW** and **ELECTRON FLOW**. Hole flow is very similar to electron flow except that holes (positive charges) move toward a negative potential and in an opposite direction to that of the electrons. In an **INTRINSIC** semiconductor (one which does not contain any impurities), the number of holes always equals the number of conducting electrons.

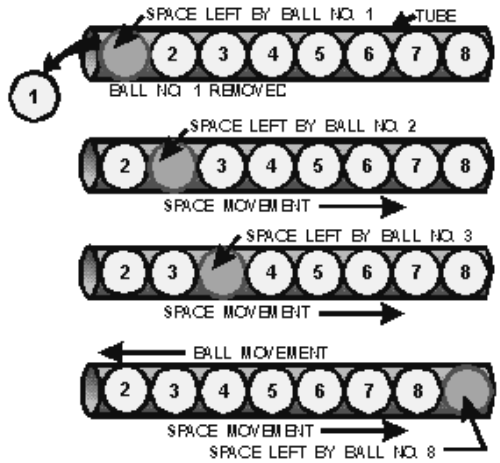

DOPING is the process by which small amounts of selected additives, called impurities, are added to semiconductors to increase their current flow. Semiconductors that undergo this treatment are referred to as **EXTRINSIC SEMICONDUCTORS**.

An **N-TYPE SEMICONDUCTOR** is one that is doped with an **N-TYPE** or donor impurity (an impurity that easily loses its extra electron to the semiconductor causing it to have an excess number of

free electrons). Since this type of semiconductor has a surplus of electrons, the electrons are considered the majority current carriers, while the holes are the minority current carriers.

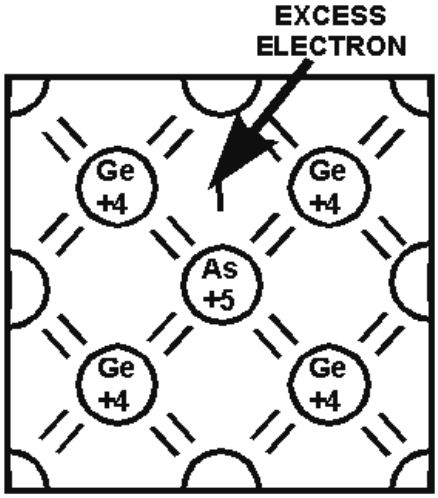

A **P-TYPE SEMICONDUCTOR** is one which is doped with a P-TYPE or acceptor impurity (an impurity that reduces the number of free electrons causing more holes). The holes in this type semiconductor are the majority current carriers since they are present in the greatest quantity while the electrons are the minority current carriers.

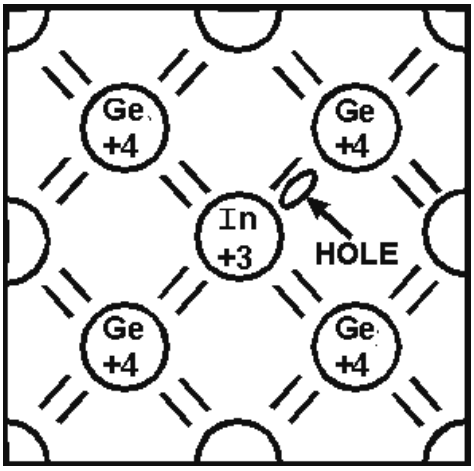

The **SEMICONDUCTOR DIODE**, also known as **a PN JUNCTION DIODE**, is a two-element semiconductor device that makes use of the rectifying properties of a PN junction to convert alternating current into direct current by permitting current flow in only one direction.

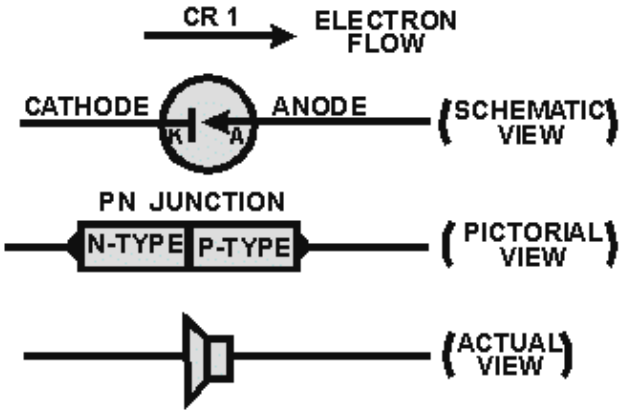

A **PN JUNCTION CONSTRUCTION** varies from one manufacturer to the next. Some of the more commonly used manufacturing techniques are: **GROWN**, **ALLOY** or **FUSED-ALLOY**, **DIFFUSED**, and **POINT-CONTACT**.

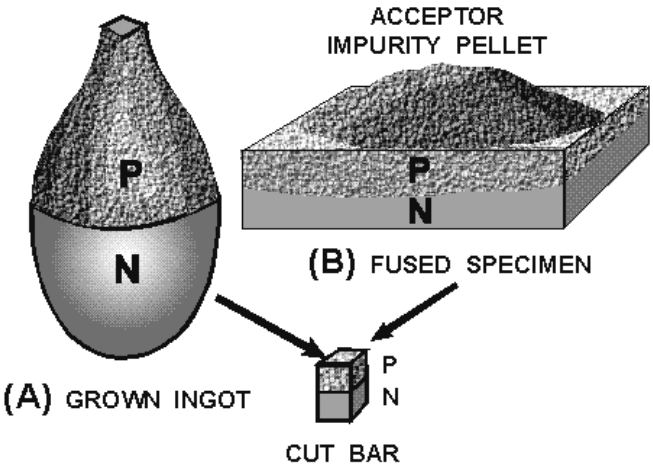

CURRENT FLOW in an **N-TYPE MATERIAL** is similar to conduction in a copper wire. That is, with voltage applied across the material, electrons will move through the crystal toward the positive terminal just like current flows in a copper wire.

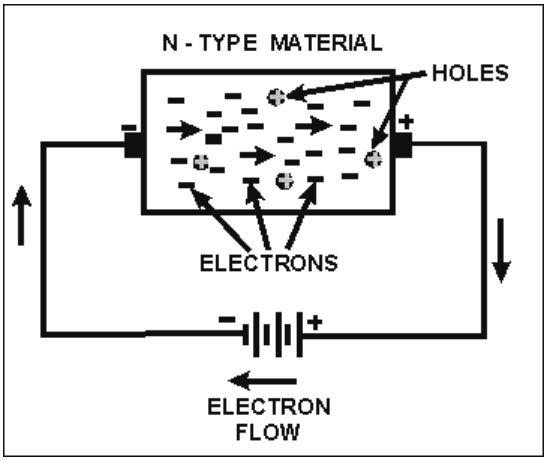

CURRENT FLOW in a **P-TYPE MATERIAL** is by positive holes, instead of negative electrons. Unlike the electron, the hole moves from the positive terminal of the P material to the negative terminal.

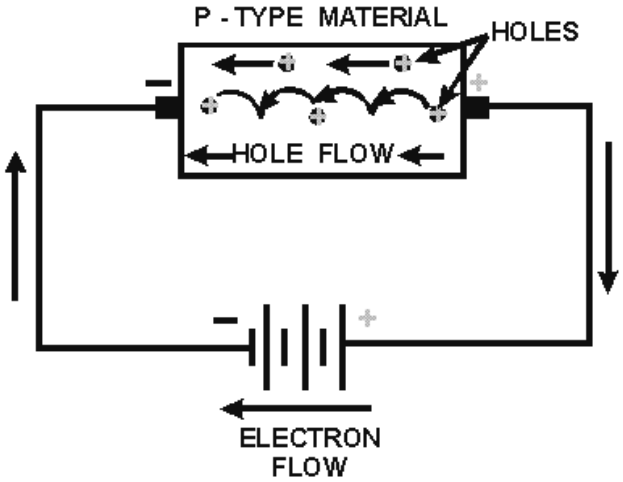

JUNCTION BARRIER is an electrostatic field that has been created by the joining of a section of N material with a section of P material. Since holes and electrons must overcome this field to cross the junction, the electrostatic field is commonly called a BARRIER. Because there is a lack or depletion of free electrons and holes in the area around the barrier, this area has become known as the DEPLETION REGION.

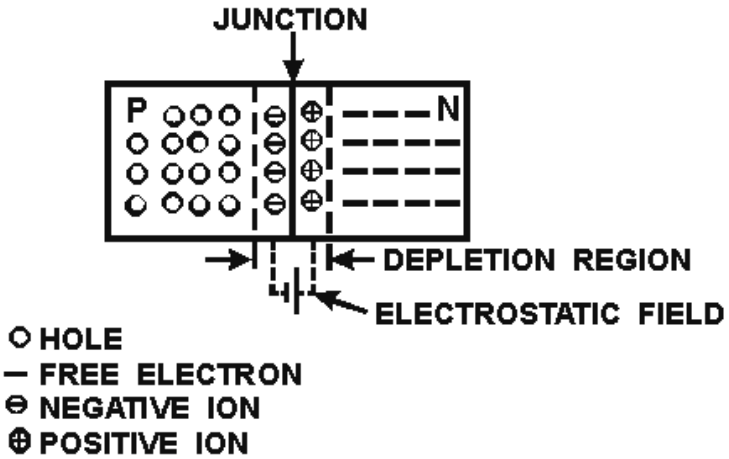

FORWARD BIAS is an external voltage that is applied to a PN junction to reduce its barrier and, therefore, aid current flow through the junction. To accomplish this function, the external voltage is connected so that it opposes the electrostatic field of the junction.

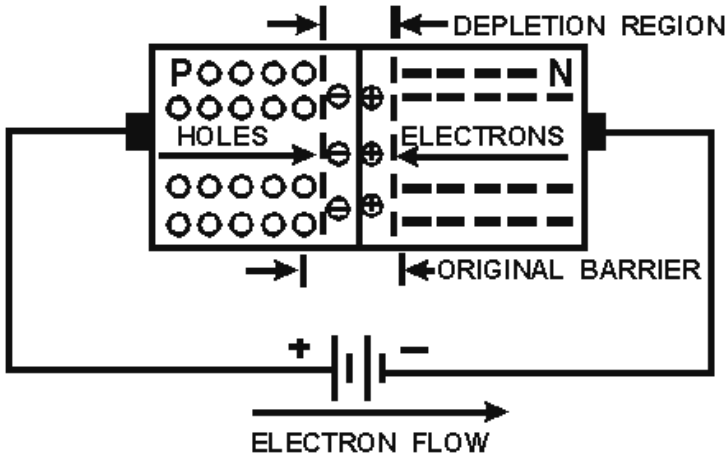

REVERSE BIAS is an external voltage that is connected across a PN junction so that its voltage aids the junction and, thereby, offers a high resistance to the current flow through the junction.

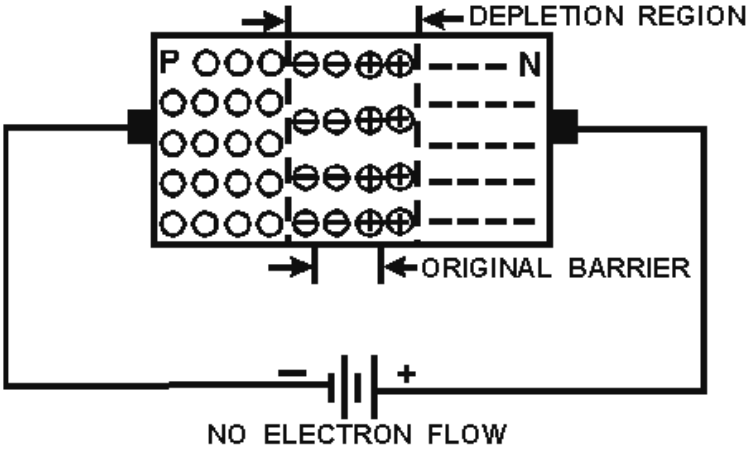

The **PN JUNCTION** has a unique ability to offer very little resistance to current flow in the forward-bias direction, but maximum resistance to current flow when reverse biased. For this reason, the PN junction is commonly used as a diode to convert ac to dc.

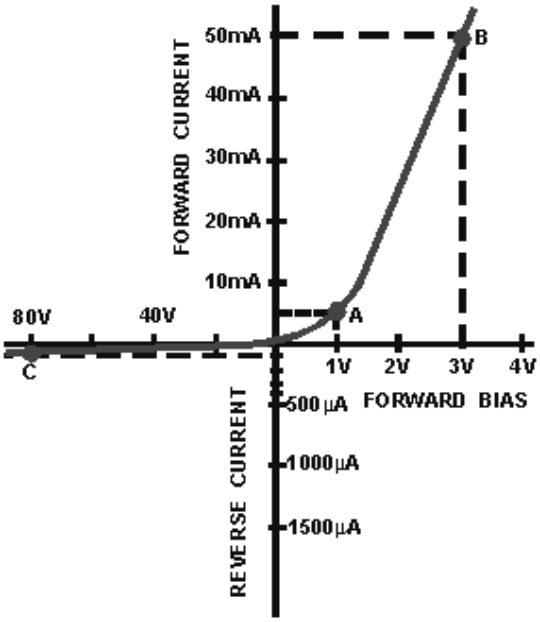

The **PN JUNCTION'S APPLICATION** expands many different areas-from a simple voltage protection device to an amplifying diode. Two of the most commonly used applications for the PN junction are the **SIGNAL DIODE** (mixing, detecting, and switching signals) and the **RECTIFYING DIODE** (converting ac to dc).

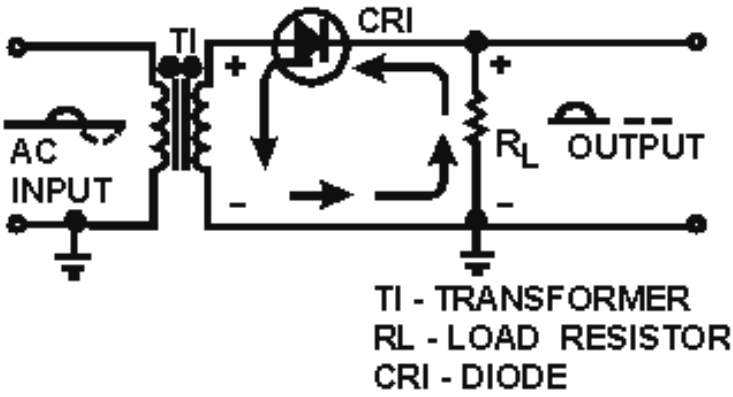

The **METALLIC RECTIFIER** or dry-disc rectifier is a metal-to-semiconductor device that acts just like a diode in that it permits current to flow more readily in one direction than the other. Metallic rectifiers are used in many applications where a relatively large amount of power is required.

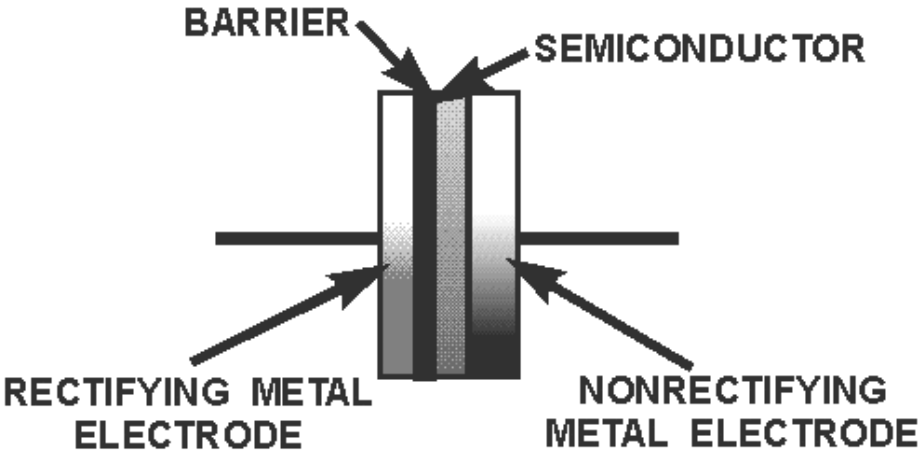

DIODE CHARACTERISTICS is the information supplied by manufacturers on different types of diodes, either in their manuals or on specification sheets.

DIODE RATINGS are the limiting value of operating conditions of a diode. Operation of the diode outside of its operating limits could damage the diode. Diodes are generally rated for: **MAXIMUM AVERAGE FORWARD CURRENT**, **PEAK RECURRENT FORWARD CURRENT**, **MAXIMUM SURGE CURRENT**, and **PEAK REVERSE VOLTAGE**.

The **SEMICONDUCTOR IDENTIFICATION SYSTEM** is an alphanumerical code used to distinguish one semiconductor from another. It is used for diodes, transistors, and many other special semiconductor devices.

XNYYY

XN — COMPONENT

YYY — IDENTIFICATION NUMBER

X - NUMBER OF SEMICONDUCTOR JUNCTIONS
N - A SEMICONDUCTOR
YYY - IDENTIFICATION NUMBER (ORDER OR REGISTRATION NUMBER)
ALSO INCLUDES SUFFIX LETTER (IF APPLICABLE) TO INDICATE

1. MATCHING DEVICES
2. REVERSE POLARITY
3. MODIFICATION

EXAMPLE - 1N345A (AN IMPROVED VERSION OF THE SEMICONDUCTOR DIODE TYPE 345)

DIODE MARKINGS are letters and symbols placed on the diode by manufacturers to distinguish one end of the diode from the other. In some cases, an unusual shape or the addition of color code bands is used to distinguish the cathode from the anode.

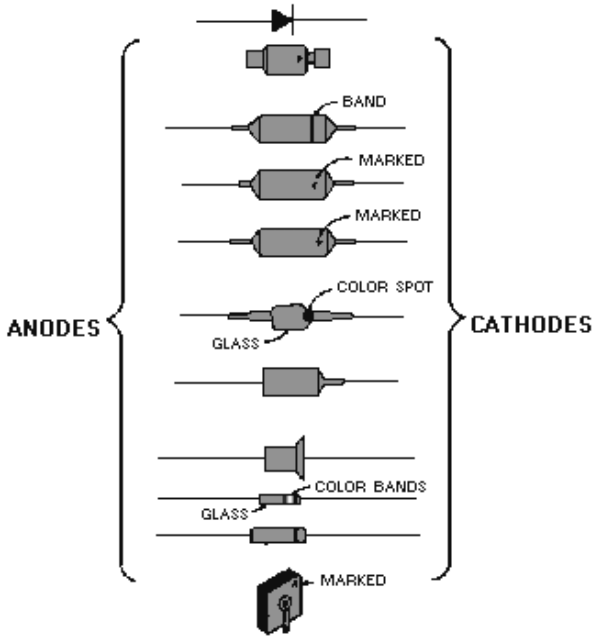

The **STANDARD DIODE COLOR CODE SYSTEM** serves two purposes when it is used: (1) it identifies the cathode end of the diode, and (2) it also serves to identify the diode by number.

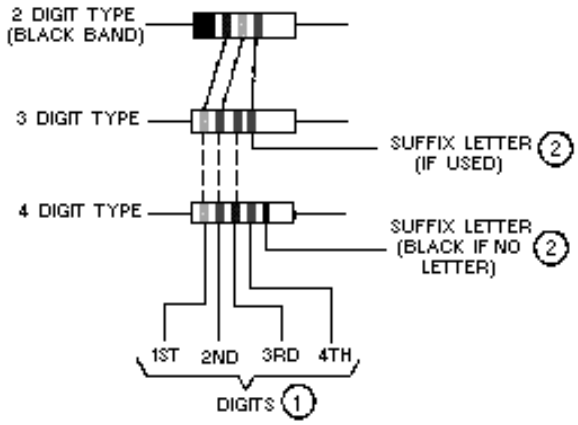

COLOR	1 DIGIT	2 DIODE SUFFIX LETTER
BLACK	0	-
BROWN	1	A
RED	2	B
ORANGE	3	C
YELLOW	4	D
GREEN	5	E
BLUE	6	F
VIOLET	7	G
GRAY	8	H
WHITE	9	J
SILVER	-	-
GOLD	-	-
NONE	-	-

DIODE MAINTENANCE is the procedures or methods used to keep a diode in good operating condition. To prevent diode damage, you should observe standard diode safety precautions and ensure that diodes are not subjected to heat, current overloads, and excessively high operating voltages.

TESTING A DIODE can be accomplished by using an ohmmeter, the substitution method, or a dynamic diode tester. The most convenient and quickest way of testing a diode is with an ohmmeter.

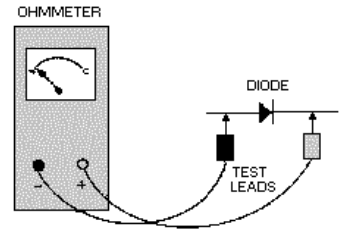

REVERSE CONDITION -
HIGH RESISTANCE MEASUREMENT

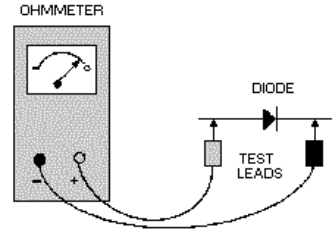

FORWARD CONDITION -
LOW RESISTANCE MEASUREMENT

ANSWERS TO QUESTIONS Q1. THROUGH Q36.

A1. An electronic device that operates by virtue of the movement of electrons within a solid piece of semiconductor material.

A2. It is the decrease in a semiconductor's resistance as temperature rises.

A3. Space systems, computers, and data processing equipment.

A4. The electron tube requires filament or heater voltage, whereas the semiconductor device does not; consequently, no power input is spent by the semiconductor for conduction.

A5. Anything that occupies space and has weight. Solid, liquid, and gas.

A6. The atom.

A7. Electrons-negative, protons-positive, and neutrons-neutral.

A8. The valence shell.

A9. Quanta.

A10. A negatively charged atom having more than its normal amount of electrons.

A11. The energy levels of an atom in a solid group together to form energy bands, whereas the isolated atom does not.

A12. The width of the forbidden band.

A13. The number of electrons in the valence shell.

A14. Covalent bonding.

A15. Electron flow and hole flow.

A16. Intrinsic.

A17. P-type crystal.

A18. Electrons.

A19. To convert alternating current into direct current.

A20. Toward the arrow.

A21. Point-contact.

A22. Holes.

A23. N-type material.

A24. Depletion region.

A25. Negative.

A26. Forward.

A27. Any device that draws current.

A28. A pulsating dc voltage.

A29. Metallic rectifier.

A30. Forward bias.

A31. A characteristic curve.

A32. They are the limiting values of operating conditions outside which operations could cause diode damage.

A33. A semiconductor.

A34. 1N368.

A35. Heat.

A36. The diode is open or has a high-forward resistance.

CHAPTER 2

TRANSISTORS

LEARNING OBJECTIVES

Upon completion of this chapter, you should be able to do the following:

1. Define the term *transistor* and give a brief description of its construction and operation.
2. Explain how the transistor can be used to amplify a signal.
3. Name the four classes of amplifiers and give an explanation for each.
4. List the three different transistor circuit configurations and explain their operation.
5. Identify the different types of transistors by their symbology and alphanumerical designations.
6. List the precautions to be taken when working with transistors and describe ways to test them.
7. Explain the meaning of the expression "integrated circuits."
8. Give a brief description on how integrated circuits are constructed and the advantages they offer over conventional transistor circuits.
9. Name the two types of circuit boards.
10. State the purpose and function of modular circuitry.

INTRODUCTION TO TRANSISTORS

The discovery of the first transistor in 1948 by a team of physicists at the Bell Telephone Laboratories sparked an interest in solid-state research that spread rapidly. The transistor, which began as a simple laboratory oddity, was rapidly developed into a semiconductor device of major importance. The transistor demonstrated for the first time in history that amplification in solids was possible. Before the transistor, amplification was achieved only with electron tubes. Transistors now perform numerous electronic tasks with new and improved transistor designs being continually put on the market. In many cases, transistors are more desirable than tubes because they are small, rugged, require no filament power, and operate at low voltages with comparatively high efficiency. The development of a family of transistors has even made possible the miniaturization of electronic circuits. Figure 2-1 shows a sample of the many different types of transistors you may encounter when working with electronic equipment.

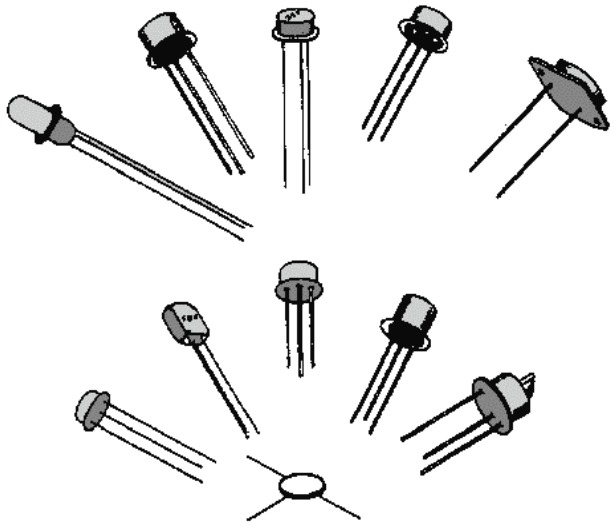

Figure 2-1.—An assortment of different types of transistors.

Transistors have infiltrated virtually every area of science and industry, from the family car to satellites. Even the military depends heavily on transistors. The ever increasing uses for transistors have created an urgent need for sound and basic information regarding their operation.

From your study of the PN-junction diode in the preceding chapter, you now have the basic knowledge to grasp the principles of transistor operation. In this chapter you will first become acquainted with the basic types of transistors, their construction, and their theory of operation. You will also find out just how and why transistors amplify. Once this basic information is understood, transistor terminology, capabilities, limitations, and identification will be discussed. Last, we will talk about transistor maintenance, integrated circuits, circuit boards, and modular circuitry.

TRANSISTOR FUNDAMENTALS

The first solid-state device discussed was the two-element semiconductor diode. The next device on our list is even more unique. It not only has one more element than the diode but it can amplify as well. Semiconductor devices that have-three or more elements are called TRANSISTORS. The term transistor was derived from the words TRANSfer and resISTOR. This term was adopted because it best describes the operation of the transistor - the transfer of an input signal current from a low-resistance circuit to a high-resistance circuit. Basically, the transistor is a solid-state device that amplifies by controlling the flow of current carriers through its semiconductor materials.

There are many different types of transistors, but their basic theory of operation is all the same. As a matter of fact, the theory we will be using to explain the operation of a transistor is the same theory used earlier with the PN-junction diode except that now two such junctions are required to form the three elements of a transistor. The three elements of the two-junction transistor are (1) the EMITTER, which gives off, or emits," current carriers (electrons or holes); (2) the BASE, which controls the flow of current carriers; and (3) the COLLECTOR, which collects the current carriers.

CLASSIFICATION

Transistors are classified as either NPN or PNP according to the arrangement of their N and P materials. Their basic construction and chemical treatment is implied by their names, "NPN" or "PNP." That

is, an NPN transistor is formed by introducing a thin region of P-type material between two regions of N-type material. On the other hand, a PNP transistor is formed by introducing a thin region of N-type material between two regions of P-type material. Transistors constructed in this manner have two PN junctions, as shown in figure 2-2. One PN junction is between the emitter and the base; the other PN junction is between the collector and the base. The two junctions share one section of semiconductor material so that the transistor actually consists of three elements.

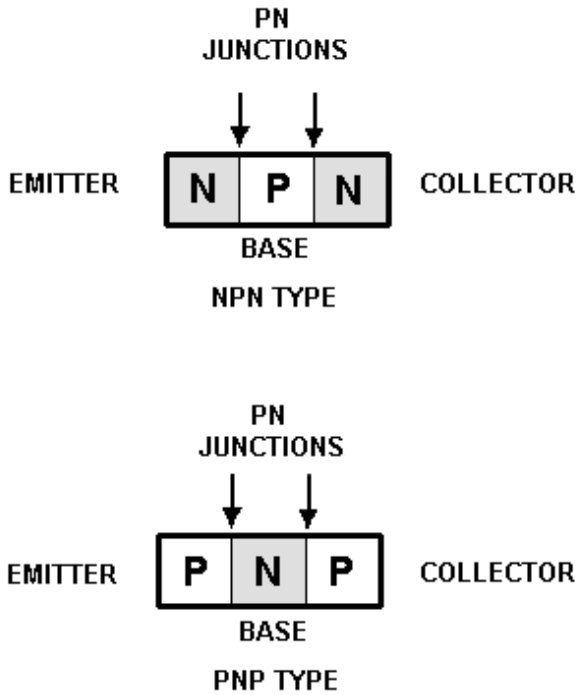

Figure 2-2.—Transistor block diagrams.

Since the majority and minority current carriers are different for N and P materials, it stands to reason that the internal operation of the NPN and PNP transistors will also be different. The theory of operation of the NPN and PNP transistors will be discussed separately in the next few paragraphs. Any additional information about the PN junction will be given as the theory of transistor operation is developed.

To prepare you for the forthcoming information, the two basic types of transistors along with their circuit symbols are shown in figure 2-3. It should be noted that the two symbols are different. The horizontal line represents the base, the angular line with the arrow on it represents the emitter, and the other angular line represents the collector. The direction of the arrow on the emitter distinguishes the NPN from the PNP transistor. If the arrow points in, (Points iN) the transistor is a PNP. On the other hand if the arrow points out, the transistor is an NPN (Not Pointing iN).

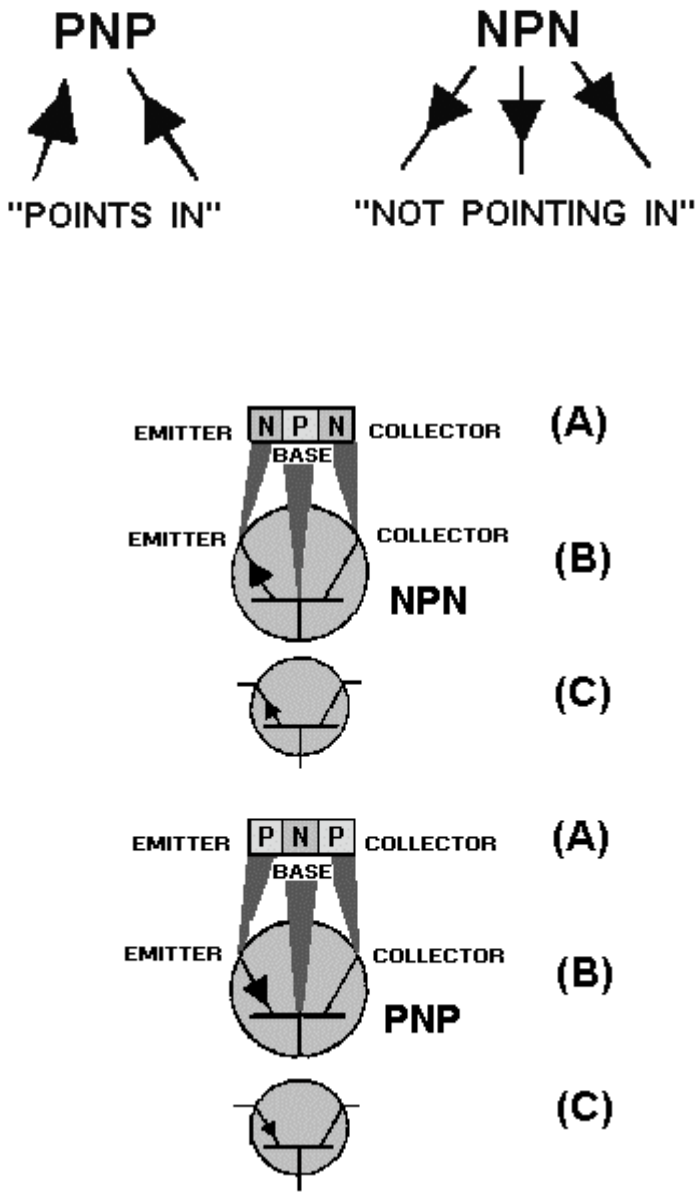

Figure 2-3.—Transistor representations.

Another point you should keep in mind is that the arrow always points in the direction of hole flow, or from the P to N sections, no matter whether the P section is the emitter or base. On the other hand, electron flow is always toward or against the arrow, just like in the junction diode.

CONSTRUCTION

The very first transistors were known as point-contact transistors. Their construction is similar to the construction of the point-contact diode covered in chapter 1. The difference, of course, is that the point-contact transistor has two P or N regions formed instead of one. Each of the two regions constitutes an electrode (element) of the transistor. One is named the emitter and the other is named the collector, as shown in figure 2-4, view A.

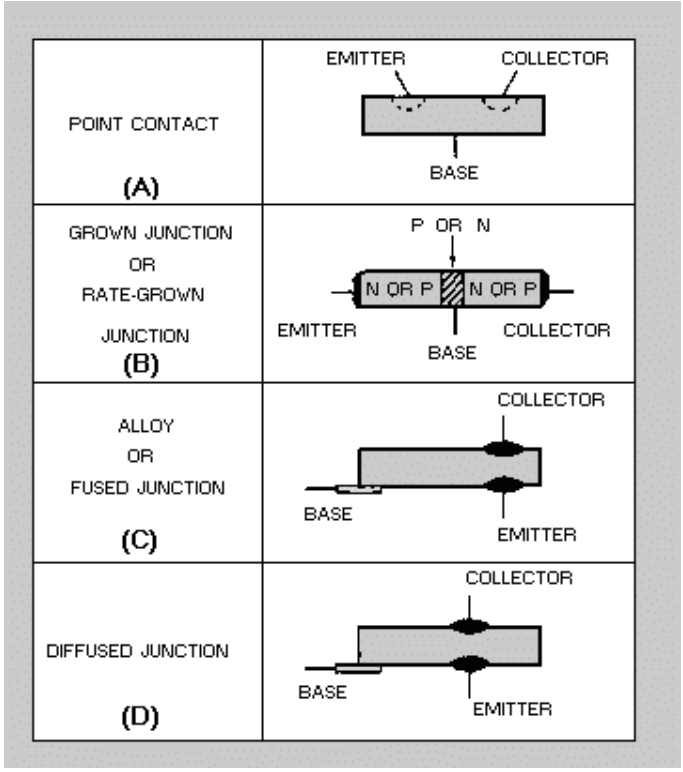

Figure 2-4.—Transistor constructions.

Point-contact transistors are now practically obsolete. They have been replaced by junction transistors, which are superior to point-contact transistors in nearly all respects. The junction transistor generates less noise, handles more power, provides higher current and voltage gains, and can be mass-produced more cheaply than the point-contact transistor. Junction transistors are manufactured in much the same manner as the PN junction diode discussed earlier. However, when the PNP or NPN material is grown (view B), the impurity mixing process must be reversed twice to obtain the two junctions required in a transistor. Likewise, when the alloy-junction (view C) or the diffused-junction (view D) process is used, two junctions must also be created within the crystal.

Although there are numerous ways to manufacture transistors, one of the most important parts of any manufacturing process is quality control. Without good quality control, many transistors would prove unreliable because the construction and processing of a transistor govern its thermal ratings, stability, and electrical characteristics. Even though there are many variations in the transistor manufacturing processes, certain structural techniques, which yield good reliability and long life, are common to all processes: (1) Wire leads are connected to each semiconductor electrode; (2) the crystal is specially mounted to protect it against mechanical damage; and (3) the unit is sealed to prevent harmful contamination of the crystal.

Q1. What is the name given to the semiconductor device that has three or more elements?

Q2. What electronic function made the transistor famous?

Q3. In which direction does the arrow point on an NPN transistor?

Q4. What was the name of the very first transistor?

Q5. What is one of the most important parts of any transistor manufacturing process?

TRANSISTOR THEORY

You should recall from an earlier discussion that a forward-biased PN junction is comparable to a low-resistance circuit element because it passes a high current for a given voltage. In turn, a reverse-biased PN junction is comparable to a high-resistance circuit element. By using the Ohm's law formula for power ($P = I^2R$) and assuming current is held constant, you can conclude that the power developed across a high resistance is greater than that developed across a low resistance. Thus, if a crystal were to contain two PN junctions (one forward-biased and the other reverse-biased), a low-power signal could be injected into the forward-biased junction and produce a high-power signal at the reverse-biased junction. In this manner, a power gain would be obtained across the crystal. This concept, which is merely an extension of the material covered in chapter 1, is the basic theory behind how the transistor amplifies. With this information fresh in your mind, let's proceed directly to the NPN transistor.

NPN Transistor Operation

Just as in the case of the PN junction diode, the N material comprising the two end sections of the NPN transistor contains a number of free electrons, while the center P section contains an excess number of holes. The action at each junction between these sections is the same as that previously described for the diode; that is, depletion regions develop and the junction barrier appears. To use the transistor as an amplifier, each of these junctions must be modified by some external bias voltage. For the transistor to function in this capacity, the first PN junction (emitter-base junction) is biased in the forward, or low-resistance, direction. At the same time the second PN junction (base-collector junction) is biased in the reverse, or high-resistance, direction. A simple way to remember how to properly bias a transistor is to observe the NPN or PNP elements that make up the transistor. The letters of these elements indicate what polarity voltage to use for correct bias. For instance, notice the NPN transistor below:

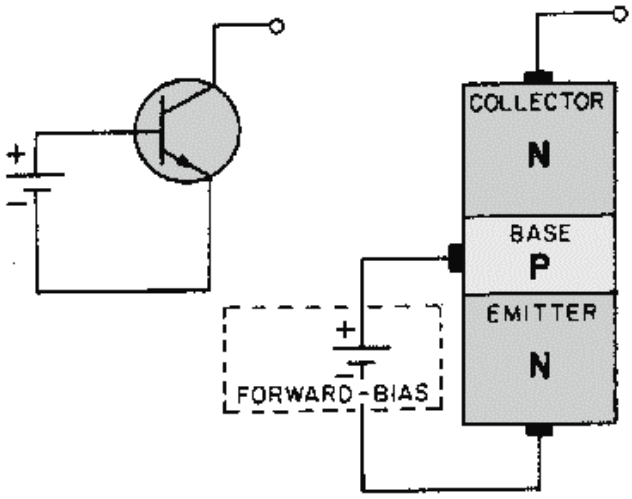

1. The emitter, which is the first letter in the NPN sequence, is connected to the negative side of the battery while the base, which is the second letter (NPN), is connected to the positive side.

2. However, since the second PN junction is required to be reverse biased for proper transistor operation, the collector must be connected to an opposite polarity voltage (positive) than that indicated by its letter designation(NPN). The voltage on the collector must also be more positive than the base, as shown below:

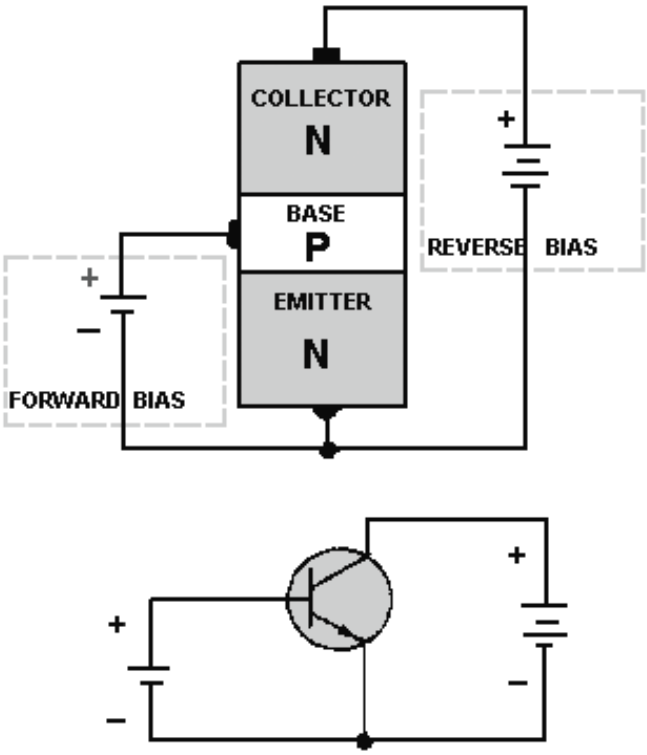

We now have a properly biased NPN transistor.

In summary, the base of the NPN transistor must be positive with respect to the emitter, and the collector must be more positive than the base.

NPN FORWARD-BIASED JUNCTION.—An important point to bring out at this time, which was not necessarily mentioned during the explanation of the diode, is the fact that the N material on one side of the forward-biased junction is more heavily doped than the P material. This results in more current being carried across the junction by the majority carrier electrons from the N material than the majority carrier holes from the P material. Therefore, conduction through the forward-biased junction, as shown in figure 2-5, is mainly by majority carrier electrons from the N material (emitter).

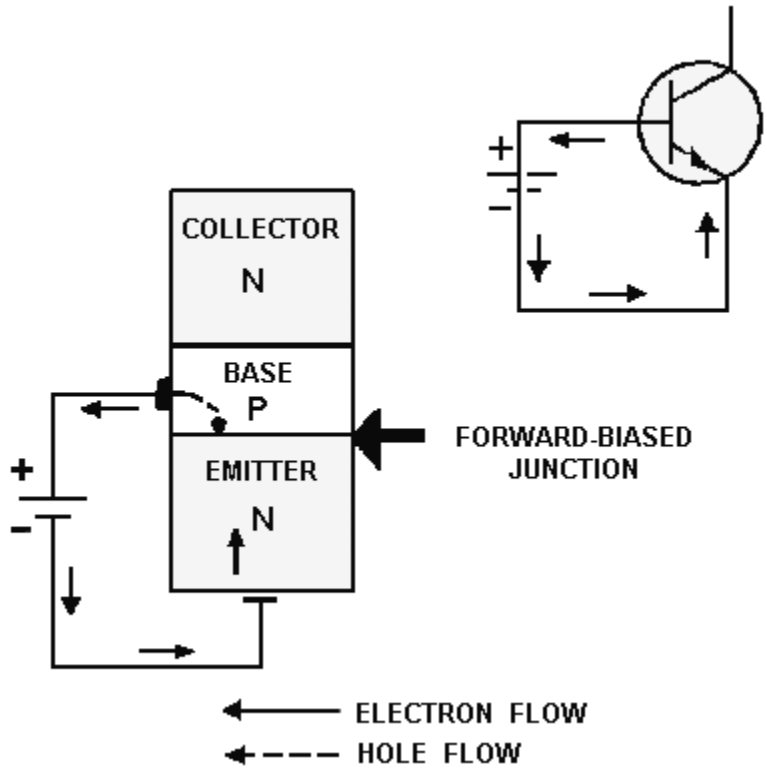

Figure 2-5.—The forward-biased junction in an NPN transistor.

With the emitter-to-base junction in the figure biased in the forward direction, electrons leave the negative terminal of the battery and enter the N material (emitter). Since electrons are majority current carriers in the N material, they pass easily through the emitter, cross over the junction, and combine with holes in the P material (base). For each electron that fills a hole in the P material, another electron will leave the P material (creating a new hole) and enter the positive terminal of the battery.

NPN REVERSE-BIASED JUNCTION.—The second PN junction (base-to-collector), or reverse-biased junction as it is called (fig. 2-6), blocks the majority current carriers from crossing the junction. However, there is a very small current, mentioned earlier, that does pass through this junction. This current is called minority current, or reverse current. As you recall, this current was produced by the electron-hole pairs. The minority carriers for the reverse-biased PN junction are the electrons in the P material and the holes in the N material. These minority carriers actually conduct the current for the reverse-biased junction when electrons from the P material enter the N material, and the holes from the N material enter the P material. However, the minority current electrons (as you will see later) play the most important part in the operation of the NPN transistor.

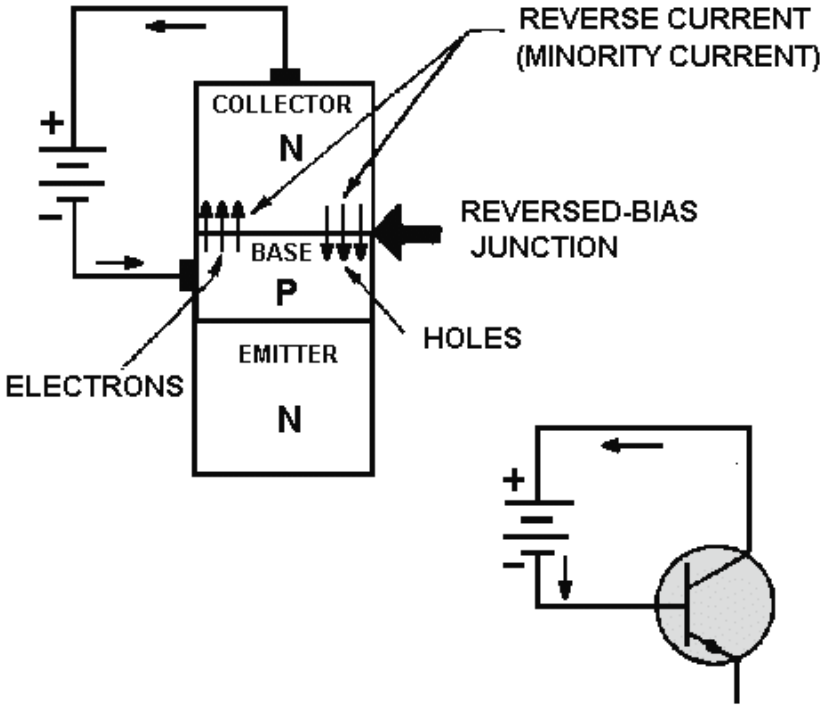

Figure 2-6.—The reverse-biased junction in an NPN transistor.

At this point you may wonder why the second PN junction (base-to-collector) is not forward biased like the first PN junction (emitter-to-base). If both junctions were forward biased, the electrons would have a tendency to flow from each end section of the N P N transistor (emitter and collector) to the center P section (base). In essence, we would have two junction diodes possessing a common base, thus eliminating any amplification and defeating the purpose of the transistor. A word of caution is in order at this time. If you should mistakenly bias the second PN junction in the forward direction, the excessive current could develop enough heat to destroy the junctions, making the transistor useless. Therefore, be sure your bias voltage polarities are correct before making any electrical connections.

NPN JUNCTION INTERACTION.—We are now ready to see what happens when we place the two junctions of the NPN transistor in operation at the same time. For a better understanding of just how the two junctions work together, refer to figure 2-7 during the discussion.

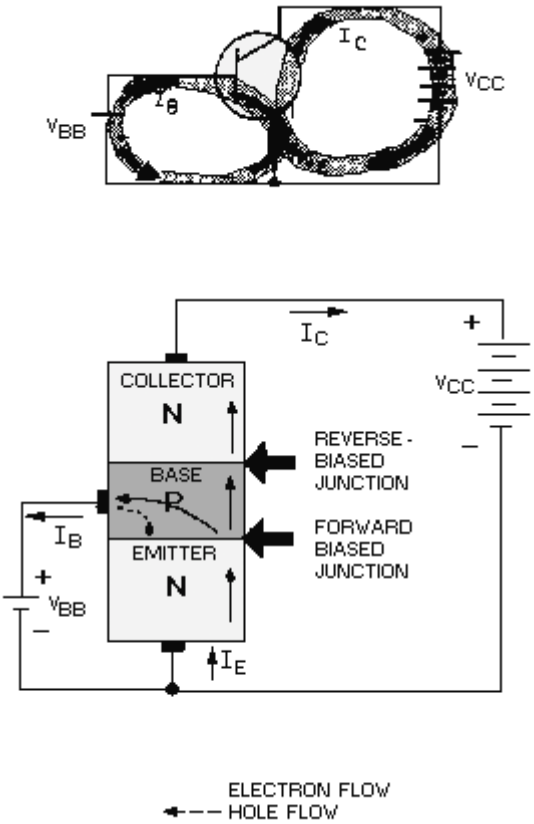

Figure 2-7.—NPN transistor operation.

The bias batteries in this figure have been labeled V_{CC} for the collector voltage supply, and V_{BB} for the base voltage supply. Also notice the base supply battery is quite small, as indicated by the number of cells in the battery, usually 1 volt or less. However, the collector supply is generally much higher than the base supply, normally around 6 volts. As you will see later, this difference in supply voltages is necessary to have current flow from the emitter to the collector.

As stated earlier, the current flow in the external circuit is always due to the movement of free electrons. Therefore, electrons flow from the negative terminals of the supply batteries to the N-type emitter. This combined movement of electrons is known as emitter current (I_E). Since electrons are the majority carriers in the N material, they will move through the N material emitter to the emitter-base junction. With this junction forward biased, electrons continue on into the base region. Once the electrons are in the base, which is a P-type material, they become minority carriers. Some of the electrons that move into the base recombine with available holes. For each electron that recombines, another electron moves out through the base lead as base current I_B (creating a new hole for eventual combination) and returns to the base supply battery V_{BB}. The electrons that recombine are lost as far as the collector is concerned. Therefore, to make the transistor more efficient, the base region is made very thin and lightly doped. This reduces the opportunity for an electron to recombine with a hole and be lost. Thus, most of the electrons that move into the base region come under the influence of the large collector reverse bias. This bias acts as forward bias for the minority carriers (electrons) in the base and, as such, accelerates them through the base-collector junction and on into the collector region. Since the collector is made of an N-type material, the electrons that reach the collector again become majority current carriers. Once in the collector, the electrons move easily through the N material and return to the positive terminal of the collector supply battery V_{CC} as collector current (I_C).

To further improve on the efficiency of the transistor, the collector is made physically larger than the base for two reasons: (1) to increase the chance of collecting carriers that diffuse to the side as well as directly across the base region, and (2) to enable the collector to handle more heat without damage.

In summary, total current flow in the NPN transistor is through the emitter lead. Therefore, in terms of percentage, I_E is 100 percent. On the other hand, since the base is very thin and lightly doped, a smaller percentage of the total current (emitter current) will flow in the base circuit than in the collector circuit. Usually no more than 2 to 5 percent of the total current is base current (I_B) while the remaining 95 to 98 percent is collector current (I_C). A very basic relationship exists between these two currents:

$$I_E = I_B + I_C$$

In simple terms this means that the emitter current is separated into base and collector current. Since the amount of current leaving the emitter is solely a function of the emitter-base bias, and because the collector receives most of this current, a small change in emitter-base bias will have a far greater effect on the magnitude of collector current than it will have on base current. In conclusion, the relatively small emitter-base bias controls the relatively large emitter-to-collector current.

Q6. To properly bias an NPN transistor, what polarity voltage is applied to the collector, and what is its relationship to the base voltage?

Q7. Why is conduction through the forward-biased junction of an NPN transistor primarily in one direction, namely from the emitter to base?

Q8. In the NPN transistor, what section is made very thin compared with the other two sections?

Q9. What percentage of current in an NPN transistor reaches the collector?

PNP Transistor Operation

The PNP transistor works essentially the same as the NPN transistor. However, since the emitter, base, and collector in the PNP transistor are made of materials that are different from those used in the NPN transistor, different current carriers flow in the PNP unit. The majority current carriers in the PNP transistor are holes. This is in contrast to the NPN transistor where the majority current carriers are electrons. To support this different type of current (hole flow), the bias batteries are reversed for the PNP transistor. A typical bias setup for the PNP transistor is shown in figure 2-8. Notice that the procedure used earlier to properly bias the NPN transistor also applies here to the PNP transistor. The first letter (P) in the PNP sequence indicates the polarity of the voltage required for the emitter (positive), and the second letter (N) indicates the polarity of the base voltage (negative). Since the base-collector junction is always reverse biased, then the opposite polarity voltage (negative) must be used for the collector. Thus, the base of the PNP transistor must be negative with respect to the emitter, and the collector must be more negative than the base. Remember, just as in the case of the NPN transistor, this difference in supply voltage is necessary to have current flow (hole flow in the case of the PNP transistor) from the emitter to the collector. Although hole flow is the predominant type of current flow in the PNP transistor, hole flow only takes place within the transistor itself, while electrons flow in the external circuit. However, it is the internal hole flow that leads to electron flow in the external wires connected to the transistor.

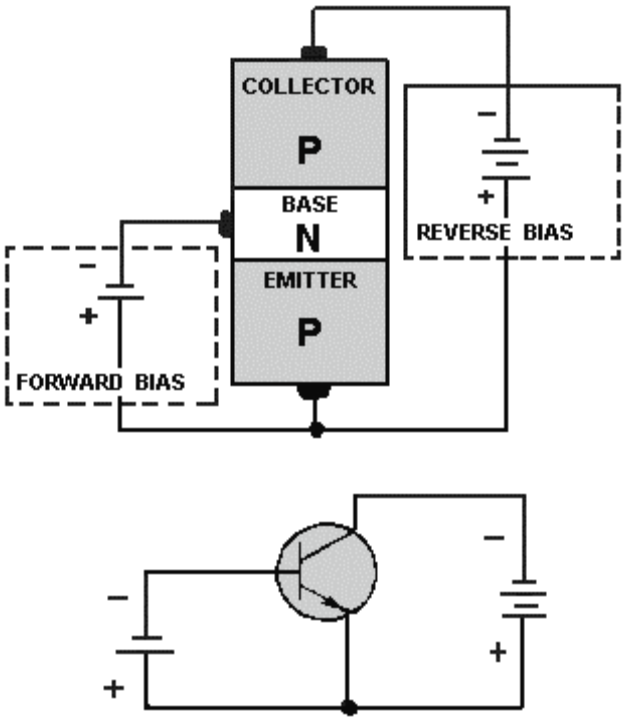

Figure 2-8.—A properly biased PNP transistor.

PNP FORWARD-BIASED JUNCTION.—Now let us consider what happens when the emitter-base junction in figure 2-9 is forward biased. With the bias setup shown, the positive terminal of the battery repels the emitter holes toward the base, while the negative terminal drives the base electrons toward the emitter. When an emitter hole and a base electron meet, they combine. For each electron that combines with a hole, another electron leaves the negative terminal of the battery, and enters the base. At the same time, an electron leaves the emitter, creating a new hole, and enters the positive terminal of the battery. This movement of electrons into the base and out of the emitter constitutes base current flow (I_B), and the path these electrons take is referred to as the emitter-base circuit.

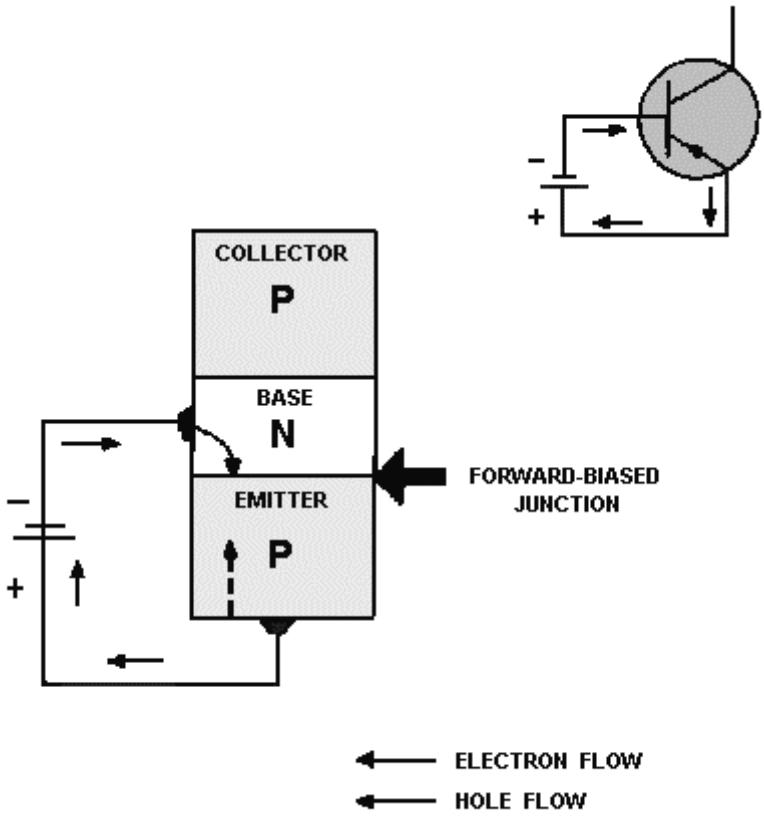

Figure 2-9.—The forward-biased junction in a PNP transistor.

PNP REVERSE-BIASED JUNCTION.—In the reverse-biased junction (fig. 2-10), the negative voltage on the collector and the positive voltage on the base block the majority current carriers from crossing the junction. However, this same negative collector voltage acts as forward bias for the minority current holes in the base, which cross the junction and enter the collector. The minority current electrons in the collector also sense forward bias-the positive base voltage-and move into the base. The holes in the collector are filled by electrons that flow from the negative terminal of the battery. At the same time the electrons leave the negative terminal of the battery, other electrons in the base break their covalent bonds and enter the positive terminal of the battery. Although there is only minority current flow in the reverse-biased junction, it is still very small because of the limited number of minority current carriers.

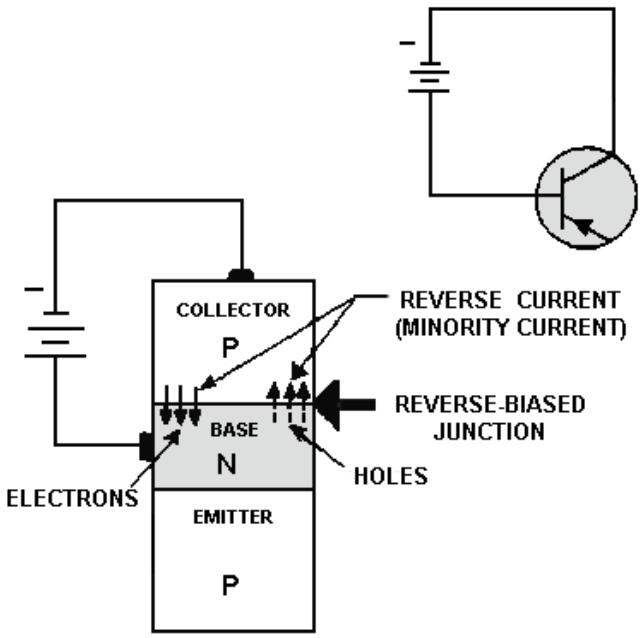

Figure 2-10.—The reverse-biased junction in a PNP transistor.

PNP JUNCTION INTERACTION.—The interaction between the forward- and reverse-biased junctions in a PNP transistor is very similar to that in an NPN transistor, except that in the PNP transistor, the majority current carriers are holes. In the PNP transistor shown in figure 2-11, the positive voltage on the emitter repels the holes toward the base. Once in the base, the holes combine with base electrons. But again, remember that the base region is made very thin to prevent the recombination of holes with electrons. Therefore, well over 90 percent of the holes that enter the base become attracted to the large negative collector voltage and pass right through the base. However, for each electron and hole that combine in the base region, another electron leaves the negative terminal of the base battery (V_{BB}) and enters the base as base current (I_B). At the same time an electron leaves the negative terminal of the battery, another electron leaves the emitter as IE (creating a new hole) and enters the positive terminal of V_{BB}. Meanwhile, in the collector circuit, electrons from the collector battery (V_{CC}) enter the collector as Ic and combine with the excess holes from the base. For each hole that is neutralized in the collector by an electron, another electron leaves the emitter and starts its way back to the positive terminal of V_{CC}.

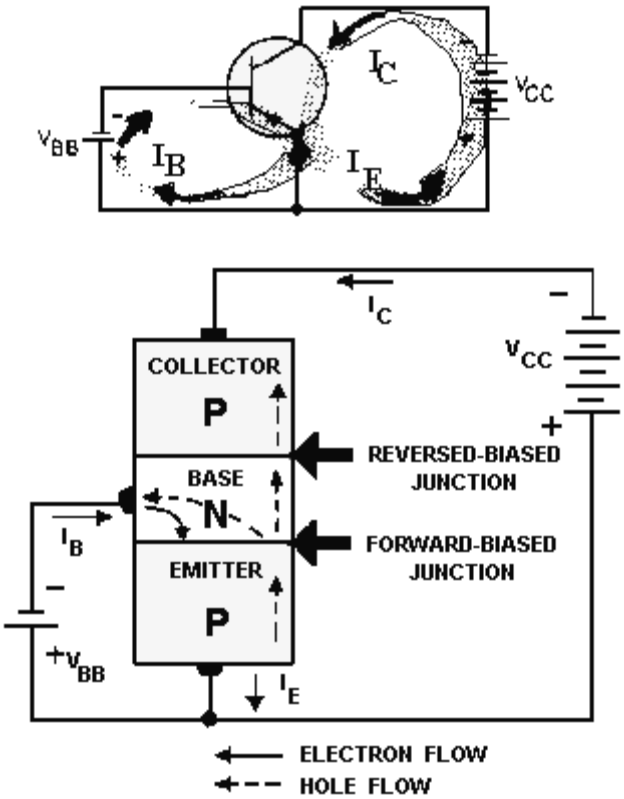

Figure 2-11.—PNP transistor operation.

Although current flow in the external circuit of the PNP transistor is opposite in direction to that of the NPN transistor, the majority carriers always flow from the emitter to the collector. This flow of majority carriers also results in the formation of two individual current loops within each transistor. One loop is the base-current path, and the other loop is the collector-current path. The combination of the current in both of these loops ($I_B + I_C$) results in total transistor current (I_E). The most important thing to remember about the two different types of transistors is that the emitter-base voltage of the PNP transistor has the same controlling effect on collector current as that of the NPN transistor. In simple terms, increasing the forward-bias voltage of a transistor reduces the emitter-base junction barrier. This action allows more carriers to reach the collector, causing an increase in current flow from the emitter to the collector and through the external circuit. Conversely, a decrease in the forward-bias voltage reduces collector current.

Q10. What are the majority current carriers in a PNP transistor?

Q11. What is the relationship between the polarity of the voltage applied to the PNP transistor and that applied to the NPN transistor?

Q12. What is the letter designation for base current?

Q13. Name the two current loops in a transistor.

THE BASIC TRANSISTOR AMPLIFIER

In the preceding pages we explained the internal workings of the transistor and introduced new terms, such as emitter, base, and collector. Since you should be familiar by now with all of the new terms

mentioned earlier and with the internal operation of the transistor, we will move on to the basic transistor amplifier.

To understand the overall operation of the transistor amplifier, you must only consider the current in and out of the transistor and through the various components in the circuit. Therefore, from this point on, only the schematic symbol for the transistor will be used in the illustrations, and rather than thinking about majority and minority carriers, we will now start thinking in terms of emitter, base, and collector current.

Before going into the basic transistor amplifier, there are two terms you should be familiar with: AMPLIFICATION and AMPLIFIER. Amplification is the process of increasing the strength of a SIGNAL. A signal is just a general term used to refer to any particular current, voltage, or power in a circuit. An amplifier is the device that provides amplification (the increase in current, voltage, or power of a signal) without appreciably altering the original signal.

Transistors are frequently used as amplifiers. Some transistor circuits are CURRENT amplifiers, with a small load resistance; other circuits are designed for VOLTAGE amplification and have a high load resistance; others amplify POWER.

Now take a look at the NPN version of the basic transistor amplifier in figure 2-12 and let's see just how it works.

So far in this discussion, a separate battery has been used to provide the necessary forward-bias voltage. Although a separate battery has been used in the past for convenience, it is not practical to use a battery for emitter-base bias. For instance, it would take a battery slightly over .2 volts to properly forward bias a germanium transistor, while a similar silicon transistor would require a voltage slightly over .6 volts. However, common batteries do not have such voltage values. Also, since bias voltages are quite critical and must be held within a few tenths of one volt, it is easier to work with bias currents flowing through resistors of high ohmic values than with batteries.

By inserting one or more resistors in a circuit, different methods of biasing may be achieved and the emitter-base battery eliminated. In addition to eliminating the battery, some of these biasing methods compensate for slight variations in transistor characteristics and changes in transistor conduction resulting from temperature irregularities. Notice in figure 2-12 that the emitter-base battery has been eliminated and the bias resistor R_B has been inserted between the collector and the base. Resistor R_B provides the necessary forward bias for the emitter-base junction. Current flows in the emitter-base bias circuit from ground to the emitter, out the base lead, and through R_B to V_{CC}. Since the current in the base circuit is very small (a few hundred microamperes) and the forward resistance of the transistor is low, only a few tenths of a volt of positive bias will be felt on the base of the transistor. However, this is enough voltage on the base, along with ground on the emitter and the large positive voltage on the collector, to properly bias the transistor.

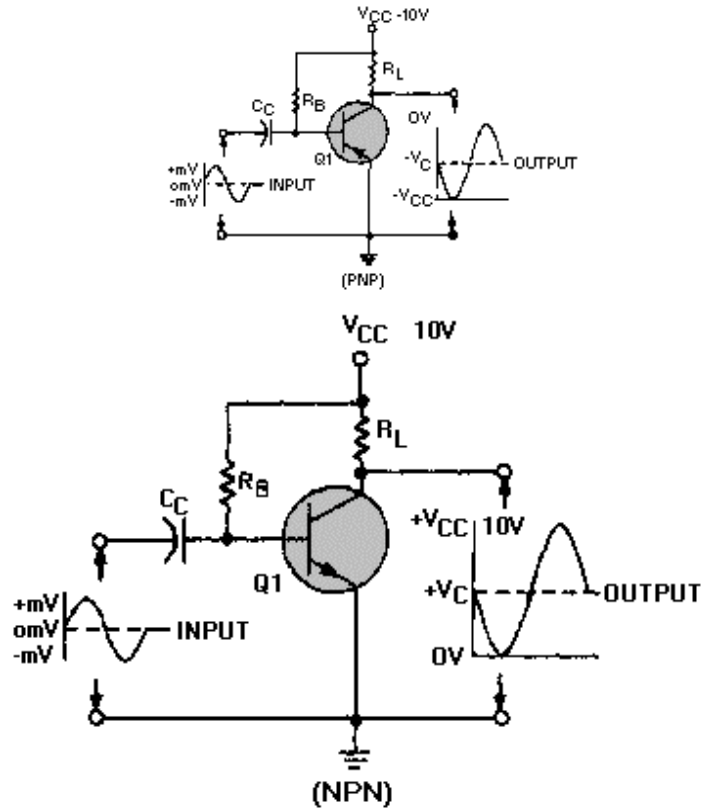

Figure 2-12.—The basic transistor amplifier.

With Q1 properly biased, direct current flows continuously, with or without an input signal, throughout the entire circuit. The direct current flowing through the circuit develops more than just base bias; it also develops the collector voltage (V_C) as it flows through Q1 and R_L. Notice the collector voltage on the output graph. Since it is present in the circuit without an input signal, the output signal starts at the V_C level and either increases or decreases. These dc voltages and currents that exist in the circuit before the application of a signal are known as QUIESCENT voltages and currents (the quiescent state of the circuit).

Resistor R_L, the collector load resistor, is placed in the circuit to keep the full effect of the collector supply voltage off the collector. This permits the collector voltage (V_C) to change with an input signal, which in turn allows the transistor to amplify voltage. Without R_L in the circuit, the voltage on the collector would always be equal to V_{CC}.

The coupling capacitor (C_C) is another new addition to the transistor circuit. It is used to pass the ac input signal and block the dc voltage from the preceding circuit. This prevents dc in the circuitry on the left of the coupling capacitor from affecting the bias on Q1. The coupling capacitor also blocks the bias of Q1 from reaching the input signal source.

The input to the amplifier is a sine wave that varies a few millivolts above and below zero. It is introduced into the circuit by the coupling capacitor and is applied between the base and emitter. As the input signal goes positive, the voltage across the emitter-base junction becomes more positive. This in effect increases forward bias, which causes base current to increase at the same rate as that of the input sine wave. Emitter and collector currents also increase but much more than the base current. With an increase in collector current, more voltage is developed across R_L. Since the voltage across R_L and the voltage across Q1 (collector to emitter) must add up to V_{CC}, an increase in voltage across R_L results in an equal decrease in

voltage across Q1. Therefore, the output voltage from the amplifier, taken at the collector of Q1 with respect to the emitter, is a negative alternation of voltage that is larger than the input, but has the same sine wave characteristics.

During the negative alternation of the input, the input signal opposes the forward bias. This action decreases base current, which results in a decrease in both emitter and collector currents. The decrease in current through R_L decreases its voltage drop and causes the voltage across the transistor to rise along with the output voltage. Therefore, the output for the negative alternation of the input is a positive alternation of voltage that is larger than the input but has the same sine wave characteristics.

By examining both input and output signals for one complete alternation of the input, we can see that the output of the amplifier is an exact reproduction of the input except for the reversal in polarity and the increased amplitude (a few millivolts as compared to a few volts).

The PNP version of this amplifier is shown in the upper part of the figure. The primary difference between the NPN and PNP amplifier is the polarity of the source voltage. With a negative V_{CC}, the PNP base voltage is slightly negative with respect to ground, which provides the necessary forward bias condition between the emitter and base.

When the PNP input signal goes positive, it opposes the forward bias of the transistor. This action cancels some of the negative voltage across the emitter-base junction, which reduces the current through the transistor. Therefore, the voltage across the load resistor decreases, and the voltage across the transistor increases. Since V_{CC} is negative, the voltage on the collector (V_C) goes in a negative direction (as shown on the output graph) toward $-V_{CC}$ (for example, from -5 volts to -7 volts). Thus, the output is a negative alternation of voltage that varies at the same rate as the sine wave input, but it is opposite in polarity and has a much larger amplitude.

During the negative alternation of the input signal, the transistor current increases because the input voltage aids the forward bias. Therefore, the voltage across R_L increases, and consequently, the voltage across the transistor decreases or goes in a positive direction (for example: from –5 volts to –3 volts). This action results in a positive output voltage, which has the same characteristics as the input except that it has been amplified and the polarity is reversed.

In summary, the input signals in the preceding circuits were amplified because the small change in base current caused a large change in collector current. And, by placing resistor R_L in series with the collector, voltage amplification was achieved.

Q14. What is the name of the device that provides an increase in current, voltage, or power of a signal without appreciably altering the original signal?

Q15. Besides eliminating the emitter-base battery, what other advantages can different biasing methods offer?

Q16. In the basic transistor amplifier discussed earlier, what is the relationship between the polarity of the input and output signals?

Q17. What is the primary difference between the NPN and PNP amplifiers?

TYPES OF BIAS

One of the basic problems with transistor amplifiers is establishing and maintaining the proper values of quiescent current and voltage in the circuit. This is accomplished by selecting the proper circuit-biasing conditions and ensuring these conditions are maintained despite variations in ambient (surrounding)

temperature, which cause changes in amplification and even distortion (an unwanted change in a signal). Thus a need arises for a method to properly bias the transistor amplifier and at the same time stabilize its dc operating point (the no signal values of collector voltage and collector current). As mentioned earlier, various biasing methods can be used to accomplish both of these functions. Although there are numerous biasing methods, only three basic types will be considered.

Base-Current Bias (Fixed Bias)

The first biasing method, called BASE CURRENT BIAS or sometimes FIXED BIAS, was used in figure 2-12. As you recall, it consisted basically of a resistor (R_B) connected between the collector supply voltage and the base. Unfortunately, this simple arrangement is quite thermally unstable. If the temperature of the transistor rises for any reason (due to a rise in ambient temperature or due to current flow through it), collector current will increase. This increase in current also causes the dc operating point, sometimes called the quiescent or static point, to move away from its desired position (level). This reaction to temperature is undesirable because it affects amplifier gain (the number of times of amplification) and could result in distortion, as you will see later in this discussion.

Self-Bias

A better method of biasing is obtained by inserting the bias resistor directly between the base and collector, as shown in figure 2-13. By tying the collector to the base in this manner, feedback voltage can be fed from the collector to the base to develop forward bias. This arrangement is called SELF-BIAS. Now, if an increase of temperature causes an increase in collector current, the collector voltage (V_C) will fall because of the increase of voltage produced across the load resistor (R_L). This drop in V_C will be fed back to the base and will result in a decrease in the base current. The decrease in base current will oppose the original increase in collector current and tend to stabilize it. The exact opposite effect is produced when the collector current decreases.

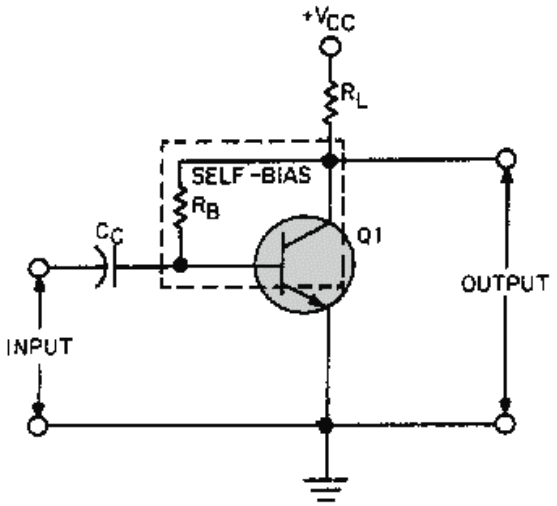

Figure 2-13.—A basic transistor amplifier with self-bias.

Self-bias has two small drawbacks: (1) It is only partially effective and, therefore, is only used where moderate changes in ambient temperature are expected; (2) it reduces amplification since the signal on the collector also affects the base voltage. This is because the collector and base signals for this particular amplifier configuration are 180 degrees out of phase (opposite in polarity) and the part of the collector signal that is fed back to the base cancels some of the input signal. This process of returning a part of the output back to its input is known as DEGENERATION or NEGATIVE FEEDBACK. Sometimes degeneration is

desired to prevent amplitude distortion (an output signal that fails to follow the input exactly) and self-bias may be used for this purpose.

Combination Bias

A combination of fixed and self-bias can be used to improve stability and at the same time overcome some of the disadvantages of the other two biasing methods. One of the most widely used combination-bias systems is the voltage-divider type shown in figure 2-14. Fixed bias is provided in this circuit by the voltage-divider network consisting of R1, R2, and the collector supply voltage (V_{CC}). The dc current flowing through the voltage-divider network biases the base positive with respect to the emitter. Resistor R3, which is connected in series with the emitter, provides the emitter with self-bias. Should I_E increase, the voltage drop across R3 would also increase, reducing V_C. This reaction to an increase in I_E by R3 is another form of degeneration, which results in less output from the amplifier. However, to provide long-term or dc thermal stability, and at the same time, allow minimal ac signal degeneration, the bypass capacitor (C_{bp}) is placed across R3. If C_{bp} is large enough, rapid signal variations will not change its charge materially and no degeneration of the signal will occur.

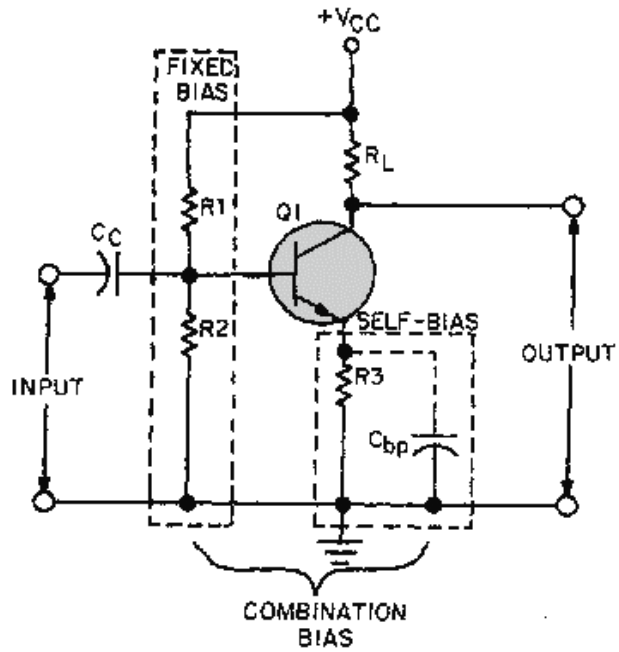

Figure 2-14.—A basic transistor amplifier with combination bias.

In summary, the fixed-bias resistors, R1 and R2, tend to keep the base bias constant while the emitter bias changes with emitter conduction. This action greatly improves thermal stability and at the same time maintains the correct operating point for the transistor.

Q18. Which biasing method is the most unstable?

Q19. What type of bias is used where only moderate changes in ambient temperature are expected?

Q20. When is degeneration tolerable in an amplifier?

Q21. What is the most widely used combination-bias system?

AMPLIFIER CLASSES OF OPERATION

In the previous discussions, we assumed that for every portion of the input signal there was an output from the amplifier. This is not always the case with amplifiers. It may be desirable to have the transistor conducting for only a portion of the input signal. The portion of the input for which there is an output determines the class of operation of the amplifier. There are four classes of amplifier operations. They are class A, class AB, class B, and class C.

Class A Amplifier Operation

Class A amplifiers are biased so that variations in input signal polarities occur within the limits of CUTOFF and SATURATION. In a PNP transistor, for example, if the base becomes positive with respect to the emitter, holes will be repelled at the PN junction and no current can flow in the collector circuit. This condition is known as cutoff. Saturation occurs when the base becomes so negative with respect to the emitter that changes in the signal are not reflected in collector-current flow.

Biasing an amplifier in this manner places the dc operating point between cutoff and saturation and allows collector current to flow during the complete cycle (360 degrees) of the input signal, thus providing an output which is a replica of the input. Figure 2-12 is an example of a class A amplifier. Although the output from this amplifier is 180 degrees out of phase with the input, the output current still flows for the complete duration of the input.

The class A operated amplifier is used as an audio- and radio-frequency amplifier in radio, radar, and sound systems, just to mention a few examples.

For a comparison of output signals for the different amplifier classes of operation, refer to figure 2-15 during the following discussion.

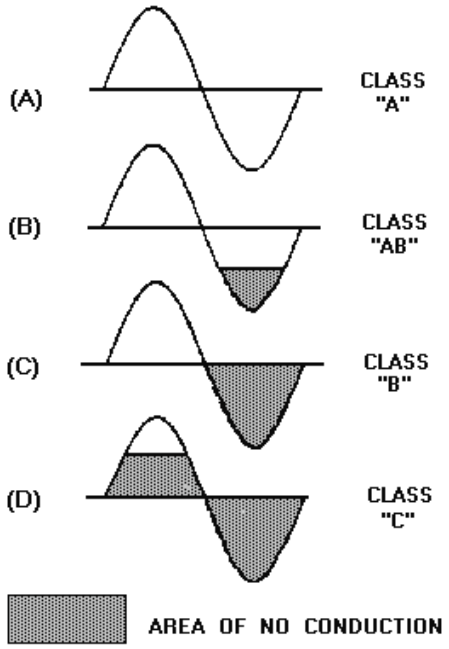

Figure 2-15.—A comparison of output signals for the different amplifier classes of operation.

Class AB Amplifier Operation

Amplifiers designed for class AB operation are biased so that collector current is zero (cutoff) for a portion of one alternation of the input signal. This is accomplished by making the forward-bias voltage less than the peak value of the input signal. By doing this, the base-emitter junction will be reverse biased during one alternation for the amount of time that the input signal voltage opposes and exceeds the value of forward-bias voltage. Therefore, collector current will flow for more than 180 degrees but less than 360 degrees of the input signal, as shown in figure 2-15 view B. As compared to the class A amplifier, the dc operating point for the class AB amplifier is closer to cutoff.

The class AB operated amplifier is commonly used as a push-pull amplifier to overcome a side effect of class B operation called crossover distortion.

Class B Amplifier Operation

Amplifiers biased so that collector current is cut off during one-half of the input signal are classified class B. The dc operating point for this class of amplifier is set up so that base current is zero with no input signal. When a signal is applied, one half cycle will forward bias the base-emitter junction and I_C will flow. The other half cycle will reverse bias the base-emitter junction and I_C will be cut off. Thus, for class B operation, collector current will flow for approximately 180 degrees (half) of the input signal, as shown in figure 2-15 view C.

The class B operated amplifier is used extensively for audio amplifiers that require high-power outputs. It is also used as the driver- and power-amplifier stages of transmitters.

Class C Amplifier Operation

In class C operation, collector current flows for less than one half cycle of the input signal, as shown in figure 2-15 view D. The class C operation is achieved by reverse biasing the emitter-base junction, which sets the dc operating point below cutoff and allows only the portion of the input signal that overcomes the reverse bias to cause collector current flow.

The class C operated amplifier is used as a radio-frequency amplifier in transmitters.

From the previous discussion, you can conclude that two primary items determine the class of operation of an amplifier — (1) the amount of bias and (2) the amplitude of the input signal. With a given input signal and bias level, you can change the operation of an amplifier from class A to class B just by removing forward bias. Also, a class A amplifier can be changed to class AB by increasing the input signal amplitude. However, if an input signal amplitude is increased to the point that the transistor goes into saturation and cutoff, it is then called an OVERDRIVEN amplifier.

You should be familiar with two terms used in conjunction with amplifiers — FIDELITY and EFFICIENCY. Fidelity is the faithful reproduction of a signal. In other words, if the output of an amplifier is just like the input except in amplitude, the amplifier has a high degree of fidelity. The opposite of fidelity is a term we mentioned earlier — distortion. Therefore, a circuit that has high fidelity has low distortion. In conclusion, a class A amplifier has a high degree of fidelity. A class AB amplifier has less fidelity, and class B and class C amplifiers have low or "poor" fidelity.

The efficiency of an amplifier refers to the ratio of output-signal power compared to the total input power. An amplifier has two input power sources: one from the signal, and one from the power supply. Since every device takes power to operate, an amplifier that operates for 360 degrees of the input signal uses more power than if operated for 180 degrees of the input signal. By using more power, an amplifier has less power available for the output signal; thus the efficiency of the amplifier is low. This is the case

with the class A amplifier. It operates for 360 degrees of the input signal and requires a relatively large input from the power supply. Even with no input signal, the class A amplifier still uses power from the power supply. Therefore, the output from the class A amplifier is relatively small compared to the total input power. This results in low efficiency, which is acceptable in class A amplifiers because they are used where efficiency is not as important as fidelity.

Class AB amplifiers are biased so that collector current is cut off for a portion of one alternation of the input, which results in less total input power than the class A amplifier. This leads to better efficiency.

Class B amplifiers are biased with little or no collector current at the dc operating point. With no input signal, there is little wasted power. Therefore, the efficiency of class B amplifiers is higher still.

The efficiency of class C is the highest of the four classes of amplifier operations.

Q22. What amplifier class of operation allows collector current to flow during the complete cycle of the input?

Q23. What is the name of the term used to describe the condition in a transistor when the emitter-base junction has zero bias or is reverse biased and there is no collector current?

Q24. What two primary items determine the class of operation of an amplifier?

Q25. What amplifier class of operation is the most inefficient but has the least distortion?

TRANSISTOR CONFIGURATIONS

A transistor may be connected in any one of three basic configurations (fig. 2-16): common emitter (CE), common base (CB), and common collector (CC). The term common is used to denote the element that is common to both input and output circuits. Because the common element is often grounded, these configurations are frequently referred to as grounded emitter, grounded base, and grounded collector.

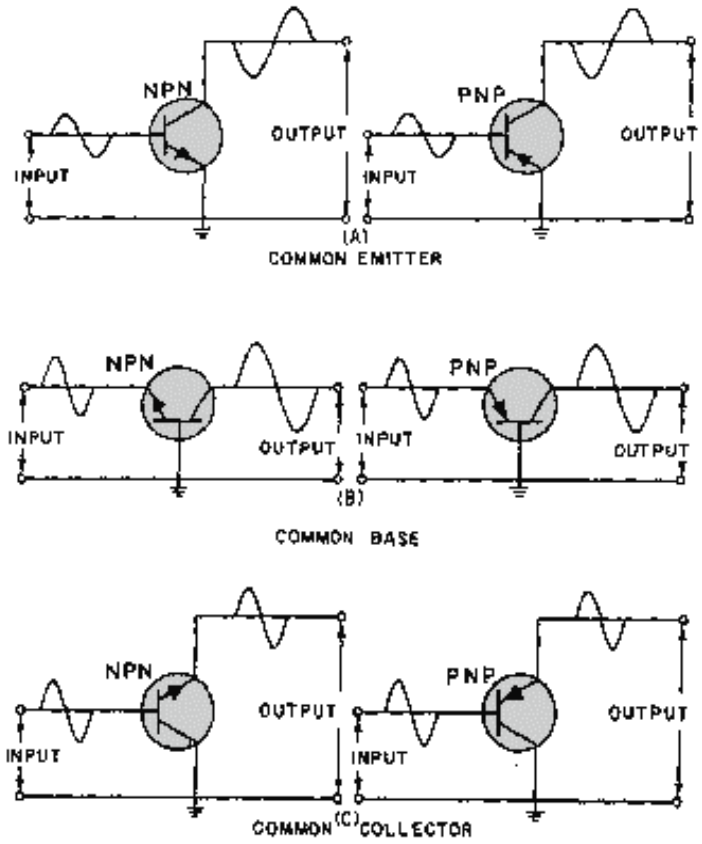

Figure 2-16.—Transistor configurations.

Each configuration, as you will see later, has particular characteristics that make it suitable for specific applications. An easy way to identify a specific transistor configuration is to follow three simple steps:

1. Identify the element (emitter, base, or collector) to which the input signal is applied.
2. Identify the element (emitter, base, or collector) from which the output signal is taken.
3. The remaining element is the common element, and gives the configuration its name.

Therefore, by applying these three simple steps to the circuit in figure 2-12, we can conclude that this circuit is more than just a basic transistor amplifier. It is a common-emitter amplifier.

Common Emitter

The common-emitter configuration (CE) shown in figure 2-16 view A is the arrangement most frequently used in practical amplifier circuits, since it provides good voltage, current, and power gain. The common emitter also has a somewhat low input resistance (500 ohms-1500 ohms), because the input is applied to the forward-biased junction, and a moderately high output resistance (30 kilohms-50 kilohms or more), because the output is taken off the reverse-biased junction. Since the input signal is applied to the base-emitter circuit and the output is taken from the collector-emitter circuit, the emitter is the element common to both input and output.

Since you have already covered what you now know to be a common-emitter amplifier (fig. 2-12), let's take a few minutes and review its operation, using the PNP common-emitter configuration shown in figure 2-16 view A.

When a transistor is connected in a common-emitter configuration, the input signal is injected between the base and emitter, which is a low resistance, low-current circuit. As the input signal swings positive, it also causes the base to swing positive with respect to the emitter. This action decreases forward bias which reduces collector current (I_C) and increases collector voltage (making V_C more negative). During the negative alternation of the input signal, the base is driven more negative with respect to the emitter. This increases forward bias and allows more current carriers to be released from the emitter, which results in an increase in collector current and a decrease in collector voltage (making V_C less negative or swing in a positive direction). The collector current that flows through the high resistance reverse-biased junction also flows through a high resistance load (not shown), resulting in a high level of amplification.

Since the input signal to the common emitter goes positive when the output goes negative, the two signals (input and output) are 180 degrees out of phase. The common-emitter circuit is the only configuration that provides a phase reversal.

The common-emitter is the most popular of the three transistor configurations because it has the best combination of current and voltage gain. The term *GAIN* is used to describe the amplification capabilities of the amplifier. It is basically a ratio of output versus input. Each transistor configuration gives a different value of gain even though the same transistor is used. The transistor configuration used is a matter of design consideration. However, as a technician you will become interested in this output versus input ratio (gain) to determine whether or not the transistor is working properly in the circuit.

The current gain in the common-emitter circuit is called BETA (β). Beta is the relationship of collector current (output current) to base current (input current). To calculate beta, use the following formula:

$$\beta = \frac{\Delta I_C}{\Delta I_B}$$

(Δ is the Greek letter delta, it is used to indicate a small change)

For example, if the input current (I_B) in a common emitter changes from 75 uA to 100 uA and the output current (I_C) changes from 1.5 mA to 2.6 mA, the current gain (β) will be 44.

$$\beta = \frac{\Delta I_C}{\Delta I_B} = \frac{11 \times 10^{-3}}{25 \times 10^{-6}} = 44$$

This simply means that a change in base current produces a change in collector current which is 44 times as large.

You may also see the term h_{fe} used in place of β. The terms h_{fe} and β are equivalent and may be used interchangeably. This is because "h_{fe}" means:

h = hybrid (meaning mixture)

f = forward current transfer ratio

e = common emitter configuration

The resistance gain of the common emitter can be found in a method similar to the one used for finding beta:

$$R = \frac{R_{out}}{R_{in}}$$

Once the resistance gain is known, the voltage gain is easy to calculate since it is equal to the current gain (β) multiplied by the resistance gain ($E = \beta R$). And, the power gain is equal to the voltage gain multiplied by the current gain β ($P = \beta E$).

Common Base

The common-base configuration (CB) shown in figure 2-16, view B is mainly used for impedance matching, since it has a low input resistance (30 ohms-160 ohms) and a high output resistance (250 kilohms-550 kilohms). However, two factors limit its usefulness in some circuit applications: (1) its low input resistance and (2) its current gain of less than 1. Since the CB configuration will give voltage amplification, there are some additional applications, which require both a low-input resistance and voltage amplification, that could use a circuit configuration of this type; for example, some microphone amplifiers.

In the common-base configuration, the input signal is applied to the emitter, the output is taken from the collector, and the base is the element common to both input and output. Since the input is applied to the emitter, it causes the emitter-base junction to react in the same manner as it did in the common-emitter circuit. For example, an input that aids the bias will increase transistor current, and one that opposes the bias will decrease transistor current.

Unlike the common-emitter circuit, the input and output signals in the common-base circuit are in phase. To illustrate this point, assume the input to the PNP version of the common-base circuit in figure 2-16 view B is positive. The signal adds to the forward bias, since it is applied to the emitter, causing the collector current to increase. This increase in Ic results in a greater voltage drop across the load resistor R_L (not shown), thus lowering the collector voltage V_C. The collector voltage, in becoming less negative, is swinging in a positive direction, and is therefore in phase with the incoming positive signal.

The current gain in the common-base circuit is calculated in a method similar to that of the common emitter except that the input current is I_E not I_B and the term ALPHA (α) is used in place of beta for gain. Alpha is the relationship of collector current (output current) to emitter current (input current). Alpha is calculated using the formula:

$$\alpha = \frac{\Delta I_C}{\Delta I_E}$$

For example, if the input current (I_E) in a common base changes from 1 mA to 3 mA and the output current (I_C) changes from 1 mA to 2.8 mA, the current gain (α) will be 0.90 or:

$$\alpha = \frac{\Delta I_C}{\Delta I_E} = \frac{18 \times 10^{-3}}{2 \times 10^{-3}} = 0.90$$

This is a current gain of less than 1.

Since part of the emitter current flows into the base and does not appear as collector current, collector current will always be less than the emitter current that causes it. (Remember, $I_E = I_B + I_C$) Therefore, ALPHA is ALWAYS LESS THAN ONE FOR A COMMON-BASE CONFIGURATION.

Another term for "α" is h_f. These terms (and h_f) are equivalent and may be used interchangeably. The meaning for the term h_f is derived in the same manner as the term h_{fe} mentioned earlier, except that the last letter "e" has been replaced with "b" to stand for common- base configuration.

Many transistor manuals and data sheets only list transistor current gain characteristics in terms of β or h_{fe}. To find alpha (α) when given beta (β), use the following formula to convert β to α for use with the common-base configuration:

$$\alpha = \frac{\beta}{\beta + 1}$$

To calculate the other gains (voltage and power) in the common-base configuration when the current gain (α) is known, follow the procedures described earlier under the common-emitter section.

Common Collector

The common-collector configuration (CC) shown in figure 2-16 view C is used mostly for impedance matching. It is also used as a current driver, because of its substantial current gain. It is particularly useful in switching circuitry, since it has the ability to pass signals in either direction (bilateral operation).

In the common-collector circuit, the input signal is applied to the base, the output is taken from the emitter, and the collector is the element common to both input and output. The common collector is equivalent to our old friend the electron-tube cathode follower. Both have high input and low output resistance. The input resistance for the common collector ranges from 2 kilohms to 500 kilohms, and the output resistance varies from 50 ohms to 1500 ohms. The current gain is higher than that in the common emitter, but it has a lower power gain than either the common base or common emitter. Like the common base, the output signal from the common collector is in phase with the input signal. The common collector is also referred to as an emitter-follower because the output developed on the emitter follows the input signal applied to the base.

Transistor action in the common collector is similar to the operation explained for the common base, except that the current gain is not based on the emitter-to-collector current ratio, alpha (α). Instead, it is based on the emitter-to-base current ratio called GAMMA (γ), because the output is taken off the emitter. Since a small change in base current controls a large change in emitter current, it is still possible to obtain high current gain in the common collector. However, since the emitter current gain is offset by the low output resistance, the voltage gain is always less than 1 (unity), exactly as in the electron-tube cathode follower

The common-collector current gain, gamma (γ), is defined as

$$\gamma = \frac{\Delta I_E}{\Delta I_B}$$

and is related to collector-to-base current gain, beta (β), of the common-emitter circuit by the formula:

$$\gamma = \beta + 1$$

Since a given transistor may be connected in any of three basic configurations, there is a definite relationship, as pointed out earlier, between alpha (α), beta (β), and gamma (γ). These relationships are listed again for your convenience:

$$\alpha = \frac{\beta}{\beta + 1} \quad \beta = \frac{\alpha}{1 - \alpha} \quad \gamma = \beta + 1$$

Take, for example, a transistor that is listed on a manufacturer's data sheet as having an alpha of 0.90. We wish to use it in a common emitter configuration. This means we must find beta. The calculations are:

$$\beta = \frac{\alpha}{1 - \alpha} = \frac{0.90}{1 - 0.90} = \frac{0.90}{0.1} = 9$$

Therefore, a change in base current in this transistor will produce a change in collector current that will be 9 times as large.

If we wish to use this same transistor in a common collector, we can find gamma (γ) by:

$$\gamma = \beta + 1 = 9 + 1 = 10$$

To summarize the properties of the three transistor configurations, a comparison chart is provided in table 2-1 for your convenience.

Table 2-1.—Transistor Configuration Comparison Chart

AMPLIFIER TYPE	COMMON BASE	COMMON EMITTER	COMMON COLLECTOR
INPUT/OUTPUT PHASE RELATIONSHIP	0º	180º	0º
VOLTAGE GAIN	HIGH	MEDIUM	LOW
CURRENT GAIN	LOW(α)	MEDIUM(β)	HIGH(γ)
POWER GAIN	LOW	HIGH	MEDIUM
INPUT RESISTANCE	LOW	MEDIUM	HIGH
OUTPUT RESISTANCE	HIGH	MEDIUM	LOW

Now that we have analyzed the basic transistor amplifier in terms of bias, class of operation, and circuit configuration, let's apply what has been covered to figure 2-12. A reproduction of figure 2-12 is shown below for your convenience.

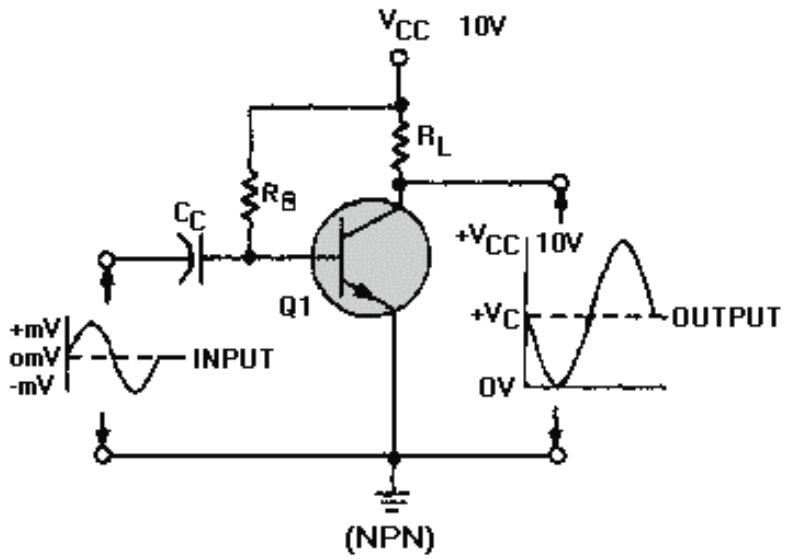

This illustration is not just the basic transistor amplifier shown earlier in figure 2-12 but a class A amplifier configured as a common emitter using fixed bias. From this, you should be able to conclude the following:

- Because of its fixed bias, the amplifier is thermally unstable.
- Because of its class A operation, the amplifier has low efficiency but good fidelity.
- Because it is configured as a common emitter, the amplifier has good voltage, current, and power gain.

In conclusion, the type of bias, class of operation, and circuit configuration are all clues to the function and possible application of the amplifier.

Q26. What are the three transistor configurations?

Q27. Which transistor configuration provides a phase reversal between the input and output signals?

Q28. What is the input current in the common-emitter circuit?

Q29. What is the current gain in a common-base circuit called?

Q30. Which transistor configuration has a current gain of less than 1?

Q31. What is the output current in the common-collector circuit?

Q32. Which transistor configuration has the highest input resistance?

Q33. What is the formula for GAMMA (γ)?

TRANSISTOR SPECIFICATIONS

Transistors are available in a large variety of shapes and sizes, each with its own unique characteristics. The characteristics for each of these transistors are usually presented on SPECIFICATION SHEETS or they may be included in transistor manuals. Although many properties of a transistor could be specified on these sheets, manufacturers list only some of them. The specifications listed vary with different manufacturers, the type of transistor, and the application of the transistor. The specifications usually cover the following items.

1. A general description of the transistor that includes the following information:

    a. The kind of transistor. This covers the material used, such as germanium or silicon; the type of transistor (NPN or PNP); and the construction of the transistor(whether alloy-junction, grown, or diffused junction, etc.).

    b. Some of the common applications for the transistor, such as audio amplifier, oscillator, rf amplifier, etc.

    c. General sales features, such as size and packaging mechanical data).

2. The "Absolute Maximum Ratings" of the transistor are the direct voltage and current values that if exceeded in operation may result in transistor failure. Maximum ratings usually include collector-to-base voltage, emitter-to-base voltage, collector current, emitter current, and collector power dissipation.

3. The typical operating values of the transistor. These values are presented only as a guide. The values vary widely, are dependent upon operating voltages, and also upon which element is common in the circuit. The values listed may include collector-emitter voltage, collector current, input resistance, load resistance, current-transfer ratio (another name for alpha or beta), and collector cutoff current, which is leakage current from collector to base when no emitter current is applied. Transistor characteristic curves may also be included in this section. A transistor characteristic curve is a graph plotting the relationship between currents and voltages in a circuit. More than one curve on a graph is called a "family of curves."

4. Additional information for engineering-design purposes.

So far, many letter symbols, abbreviations, and terms have been introduced, some frequently used and others only rarely used. For a complete list of all semiconductor letter symbols and terms, refer to EIMB series 000-0140, Section III.

TRANSISTOR IDENTIFICATION

Transistors can be identified by a Joint Army-Navy (JAN) designation printed directly on the case of the transistor. The marking scheme explained earlier for diodes is also used for transistor identification. The first number indicates the number of junctions. The letter "N" following the first number tells us that the component is a semiconductor. And, the 2- or 3-digit number following the N is the manufacturer's identification number. If the last number is followed by a letter, it indicates a later, improved version of the device. For example, a semiconductor designated as type 2N130A signifies a three-element transistor of semiconductor material that is an improved version of type 130:

2	N	130	A
NUMBER OF JUNCTIONS (TRANSISTOR)	SEMI-CONDUCTOR	IDENTIFICATION NUMBER	FIRST MODIFICATION

You may also find other markings on transistors that do not relate to the JAN marking system. These markings are manufacturers' identifications and may not conform to a standardized system. If in doubt, always replace a transistor with one having identical markings. To ensure that an identical replacement or a correct substitute is used, consult an equipment or transistor manual for specifications on the transistor.

TRANSISTOR MAINTENANCE

Transistors are very rugged and are expected to be relatively trouble free. Encapsulation and conformal coating techniques now in use promise extremely long life expectancies. In theory, a transistor should last indefinitely. However, if transistors are subjected to current overloads, the junctions will be damaged or even destroyed. In addition, the application of excessively high operating voltages can damage or destroy the junctions through arc-over or excessive reverse currents. One of the greatest dangers to the transistor is heat, which will cause excessive current flow and eventual destruction of the transistor.

To determine if a transistor is good or bad, you can check it with an ohmmeter or a transistor tester. In many cases, you can substitute a transistor known to be good for one that is questionable and thus determine the condition of a suspected transistor. This method of testing is highly accurate and sometimes the quickest, but it should be used only after you make certain that there are no circuit defects that might damage the replacement transistor. If more than one defective transistor is present in the equipment where the trouble has been localized, this testing method becomes cumbersome, as several transistors may have to be replaced before the trouble is corrected. To determine which stages failed and which transistors are not defective, all the removed transistors must be tested. This test can be made by using a standard Navy ohmmeter, transistor tester, or by observing whether the equipment operates correctly as each of the removed transistors is reinserted into the equipment. A word of caution-indiscriminate substitution of transistors in critical circuits should be avoided.

When transistors are soldered into equipment, substitution is not practicable; it is generally desirable to test these transistors in their circuits.

Q34. List three items of information normally included in the general description section of a specification sheet for a transistor.

Q35. What does the number "2" (before the letter "N") indicate in the JAN marking scheme?

Q36. What is the greatest danger to a transistor?

Q37. What method for checking transistors is cumbersome when more than one transistor is bad in a circuit?

PRECAUTIONS

Transistors, although generally more rugged mechanically than electron tubes, are susceptible to damage by electrical overloads, heat, humidity, and radiation. Damage of this nature often occurs during transistor servicing by applying the incorrect polarity voltage to the collector circuit or excessive voltage to the input circuit. Careless soldering techniques that overheat the transistor have also been known to cause considerable damage. One of the most frequent causes of damage to a transistor is the electrostatic

discharge from the human body when the device is handled. You may avoid such damage before starting repairs by discharging the static electricity from your body to the chassis containing the transistor. You can do this by simply touching the chassis. Thus, the electricity will be transferred from your body to the chassis before you handle the transistor.

To prevent transistor damage and avoid electrical shock, you should observe the following precautions when you are working with transistorized equipment:

1. Test equipment and soldering irons should be checked to make certain there is no leakage current from the power source. If leakage current is detected, isolation transformers should be used.

2. Always connect a ground between test equipment and circuit before attempting to inject or monitor a signal.

3. Ensure test voltages do not exceed maximum allowable voltage for circuit components and transistors. Also, never connect test equipment outputs directly to a transistor circuit.

4. Ohmmeter ranges that require a current of more than one milliampere in the test circuit should not be used for testing transistors.

5. Battery eliminators should not be used to furnish power for transistor equipment because they have poor voltage regulation and, possibly, high-ripple voltage.

6. The heat applied to a transistor, when soldered connections are required, should be kept to a minimum by using a low-wattage soldering iron and heat shunts, such as long-nose pliers, on the transistor leads.

7. When it becomes necessary to replace transistors, never pry transistors to loosen them from printed circuit boards.

8. All circuits should be checked for defects before replacing a transistor.

9. The power must be removed from the equipment before replacing a transistor.

10. Using conventional test probes on equipment with closely spaced parts often causes accidental shorts between adjacent terminals. These shorts rarely cause damage to an electron tube but may ruin a transistor. To prevent these shorts, the probes can be covered with insulation, except for a very short length of the tips.

LEAD IDENTIFICATION

Transistor lead identification plays an important part in transistor maintenance; because, before a transistor can be tested or replaced, its leads or terminals must be identified. Since there is no standard method of identifying transistor leads, it is quite possible to mistake one lead for another. Therefore, when you are replacing a transistor, you should pay close attention to how the transistor is mounted, particularly to those transistors that are soldered in, so that you do not make a mistake when you are installing the new transistor. When you are testing or replacing a transistor, if you have any doubts about which lead is which, consult the equipment manual or a transistor manual that shows the specifications for the transistor being used.

There are, however, some typical lead identification schemes that will be very helpful in transistor troubleshooting. These schemes are shown in figure 2-17. In the case of the oval-shaped transistor shown in view A, the collector lead is identified by a wide space between it and the base lead. The lead farthest from the collector, in line, is the emitter lead. When the leads are evenly spaced and in line, as shown in

view B, a colored dot, usually red, indicates the collector. If the transistor is round, as in view C, a red line indicates the collector, and the emitter lead is the shortest lead. In view D the leads are in a triangular arrangement that is offset from the center of the transistor. The lead opposite the blank quadrant in this scheme is the base lead. When viewed from the bottom, the collector is the first lead clockwise from the base. The leads in view E are arranged in the same manner as those is view D except that a tap is used to identify the leads. When viewed from the bottom in a clockwise direction, the first lead following the tab is the emitter, followed by the base and collector.

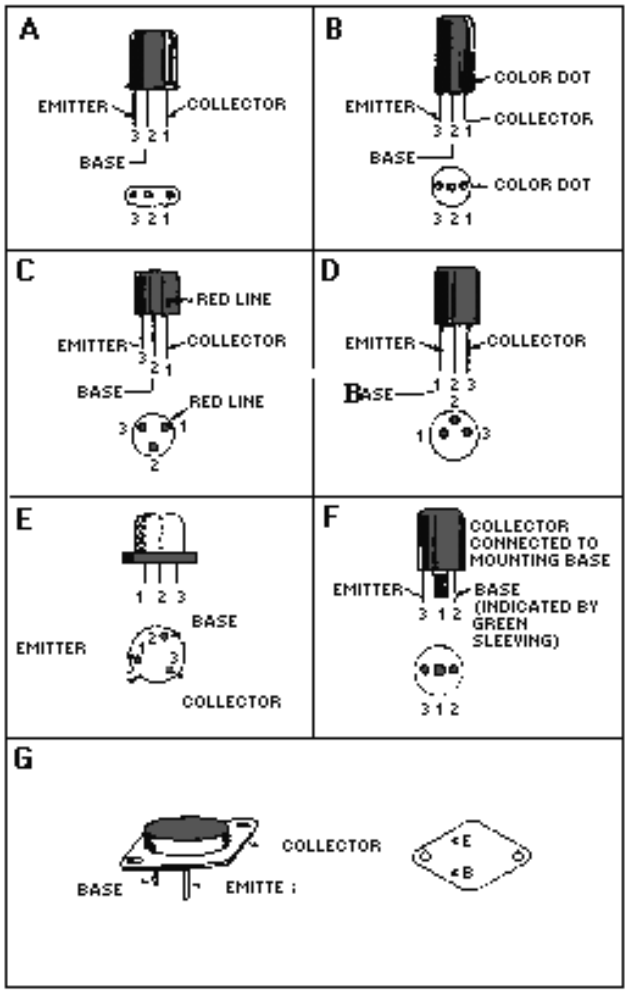

Figure 2-17.—Transistor lead identification.

In a conventional power transistor as shown in views F and G, the collector lead is usually connected to the mounting base. For further identification, the base lead in view F is covered with green sleeving. While the leads in view G are identified by viewing the transistor from the bottom in a clockwise direction (with mounting holes occupying 3 o'clock and 9 o'clock positions), the emitter lead will be either at the 5 o'clock or 11 o'clock position. The other lead is the base lead.

TRANSISTOR TESTING

There are several different ways of testing transistors. They can be tested while in the circuit, by the substitution method mentioned, or with a transistor tester or ohmmeter.

Transistor testers are nothing more than the solid-state equivalent of electron-tube testers (although they do not operate on the same principle). With most transistor testers, it is possible to test the transistor in or out of the circuit.

There are four basic tests required for transistors in practical troubleshooting: gain, leakage, breakdown, and switching time. For maintenance and repair, however, a check of two or three parameters is usually sufficient to determine whether a transistor needs to be replaced.

Since it is impractical to cover all the different types of transistor testers and since each tester comes with its own operator's manual, we will move on to something you will use more frequently for testing transistors-the ohmmeter.

Testing Transistors with an Ohmmeter

Two tests that can be done with an ohmmeter are gain, and junction resistance. Tests of a transistor's junction resistance will reveal leakage, shorts, and opens.

TRANSISTOR GAIN TEST.—A basic transistor gain test can be made using an ohmmeter and a simple test circuit. The test circuit can be made with just a couple of resistors and a switch, as shown in figure 2-18. The principle behind the test lies in the fact that little or no current will flow in a transistor between emitter and collector until the emitter-base junction is forward biased. The only precaution you should observe is with the ohmmeter. Any internal battery may be used in the meter provided that it does not exceed the maximum collector-emitter breakdown voltage.

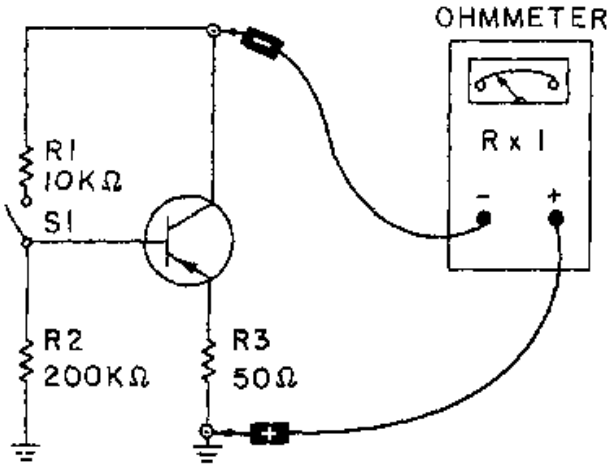

Figure 2-18.—Testing a transistor's gain with an ohmmeter.

With the switch in figure 2-18 in the open position as shown, no voltage is applied to the PNP transistor's base, and the emitter-base junction is not forward biased. Therefore, the ohmmeter should read a high resistance, as indicated on the meter. When the switch is closed, the emitter-base circuit is forward biased by the voltage across R1 and R2. Current now flows in the emitter-collector circuit, which causes a lower resistance reading on the ohmmeter. A 10-to-1 resistance ratio in this test between meter readings indicates a normal gain for an audio-frequency transistor.

To test an NPN transistor using this circuit, simply reverse the ohmmeter leads and carry out the procedure described earlier.

TRANSISTOR JUNCTION RESISTANCE TEST.—An ohmmeter can be used to test a transistor for leakage (an undesirable flow of current) by measuring the base-emitter, base-collector, and collector-emitter forward and reverse resistances.

For simplicity, consider the transistor under test in each view of figure 2-19 (view A, view B and view C) as two diodes connected back to back. Therefore, each diode will have a low forward resistance and a high reverse resistance. By measuring these resistances with an ohmmeter as shown in the figure, you can determine if the transistor is leaking current through its junctions. When making these measurements, avoid using the R1 scale on the meter or a meter with a high internal battery voltage. Either of these conditions can damage a low-power transistor.

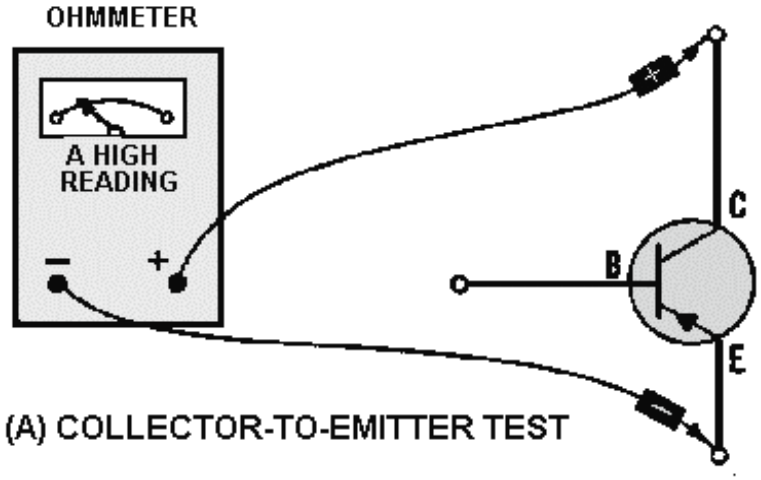

Figure 2-19A.—Testing a transistor's leakage with an ohmmeter. COLLECTOR-TO-EMITTER TEST

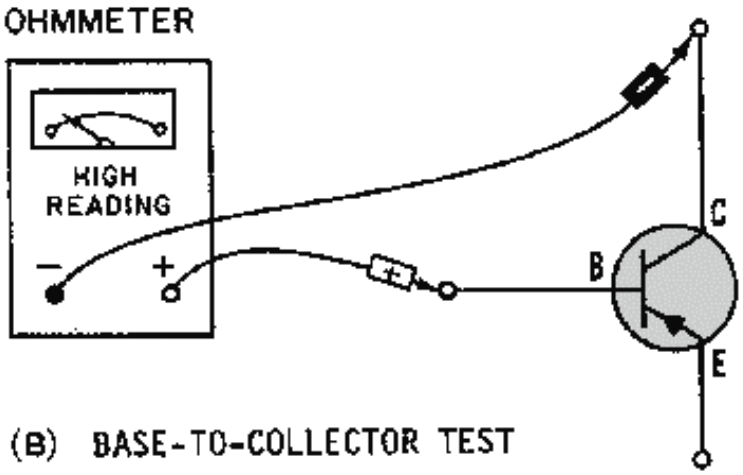

Figure 2-19B.—Testing a transistor's leakage with an ohmmeter. BASE-TO-COLLECTOR TEST

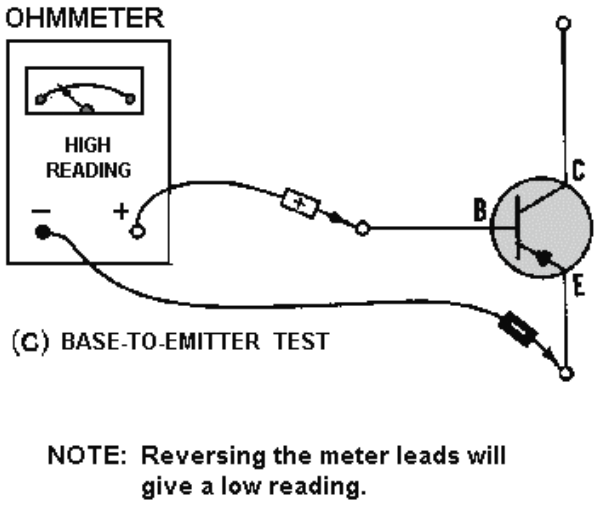

Figure 2-19C.—Testing a transistor's leakage with an ohmmeter. BASE-TO-EMITTER TEST

Now consider the possible transistor problems that could exist if the indicated readings in figure 2-19 are not obtained. A list of these problems is provided in table 2-2.

Table 2-2.—Possible Transistor Problems from Ohmmeter Readings

RESISTANCE READINGS		PROBLEMS
FORWARD	REVERSE	The transistor is:
LOW (NOT SHORTED)	LOW (NOT SHORTED)	LEAKING
LOW (SHORTED)	LOW (SHORTED)	SHORTED
HIGH	HIGH	OPEN*
*Except collector-to-emitter test.		

By now, you should recognize that the transistor used in figure 2-19 (view A, view B and view C) is a PNP transistor. If you wish to test an NPN transistor for leakage, the procedure is identical to that used for testing the PNP except the readings obtained are reversed.

When testing transistors (PNP or NPN), you should remember that the actual resistance values depend on the ohmmeter scale and the battery voltage. Typical forward and reverse resistances are insignificant. The best indicator for showing whether a transistor is good or bad is the ratio of forward-to-reverse resistance. If the transistor you are testing shows a ratio of at least 30 to 1, it is probably good. Many transistors show ratios of 100 to 1 or greater.

Q38. What safety precaution must be taken before replacing a transistor?

Q39. How is the collector lead identified on an oval-shaped transistor?

Q40. What are two transistor tests that can be done with an ohmmeter?

Q41. When you are testing the gain of an audio-frequency transistor with an ohmmeter, what is indicated by a 10-to-1 resistance ratio?

Q42. When you are using an ohmmeter to test a transistor for leakage, what is indicated by a low, but not shorted, reverse resistance reading?

MICROELECTRONICS

Up to now the various semiconductors, resistors, capacitors, etc., in our discussions have been considered as separately packaged components, called DISCRETE COMPONENTS. In this section we will introduce some of the more complex devices that contain complete circuits packaged as a single component. These devices are referred to as INTEGRATED CIRCUITS and the broad term used to describe the use of these devices to miniaturize electronic equipment is called MICROELECTRONICS.

With the advent of the transistor and the demand by the military for smaller equipment, design engineers set out to miniaturize electronic equipment. In the beginning, their efforts were frustrated because most of the other components in a circuit such as resistors, capacitors, and coils were larger than the transistor. Soon these other circuit components were miniaturized, thereby pushing ahead the development of smaller electronic equipment. Along with miniature resistors, capacitors, and other circuit elements, the production of components that were actually smaller than the space required for the interconnecting wiring and cabling became possible. The next step in the research process was to eliminate these bulky wiring components. This was accomplished with the PRINTED CIRCUIT BOARD (PCB).

A printed circuit board is a flat insulating surface upon which printed wiring and miniaturized components are connected in a predetermined design, and attached to a common base. Figure 2-20 (view A and view B) shows a typical printed circuit board. Notice that various components are connected to the board and the printed wiring is on the reverse side. With this technique, all interconnecting wiring in a piece of equipment, except for the highest power leads and cabling, is reduced to lines of conducting material (copper, silver, gold, etc.) deposited directly on the surface of an insulating "circuit board." Since printed circuit boards are readily adapted as plug-in units, the elimination of terminal boards, fittings and tie points, not to mention wires, results in a substantial reduction in the overall size of electronic equipment.

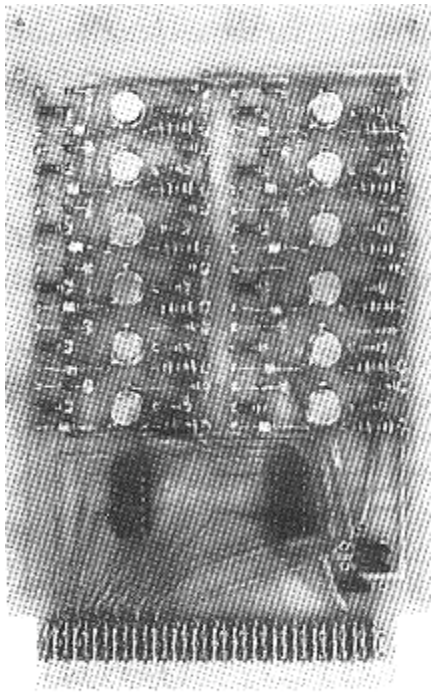

(A) FRONT SIDE

Figure 2-20A.—A typical printed circuit board (PCB). FRONT SIDE

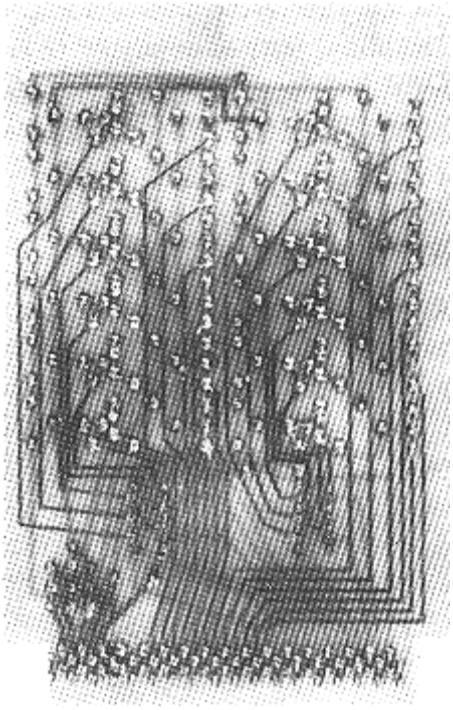

(B) REVERSE SIDE

Figure 2-20B.—A typical printed circuit board (PCB). REVERSE SIDE

After the printed circuit boards were perfected, efforts to miniaturize electronic equipment were then shifted to assembly techniques, which led to MODULAR CIRCUITRY. In this technique, printed circuit boards are stacked and connected together to form a module. This increases the packaging density of circuit components and results in a considerable reduction in the size of electronic equipment. Since the module can be designed to perform any electronic function, it is also a very versatile unit.

However, the drawback to this approach was that the modules required a considerable number of connections that took up too much space and increased costs. In addition, tests showed the reliability was adversely affected by the increase in the number of connections.

A new technique was required to improve reliability and further increase packaging density. The solution was INTEGRATED CIRCUITS.

An integrated circuit is a device that integrates (combines) both active components (transistors, diodes, etc.) and passive components (resistors, capacitors, etc.) of a complete electronic circuit in a single chip (a tiny slice or wafer of semiconductor crystal or insulator).

Integrated circuits (ICs) have almost eliminated the use of individual electronic components (resistors, capacitors, transistors, etc.) as the building blocks of electronic circuits. Instead, tiny CHIPS have been developed whose functions are not that of a single part, but of dozens of transistors, resistors, capacitors, and other electronic elements, all interconnected to perform the task of a complex circuit. Often these comprise a number of complete conventional circuit stages, such as a multistage amplifier (in one extremely small component). These chips are frequently mounted on a printed circuit board, as shown in figure 2-21, which plugs into an electronic unit.

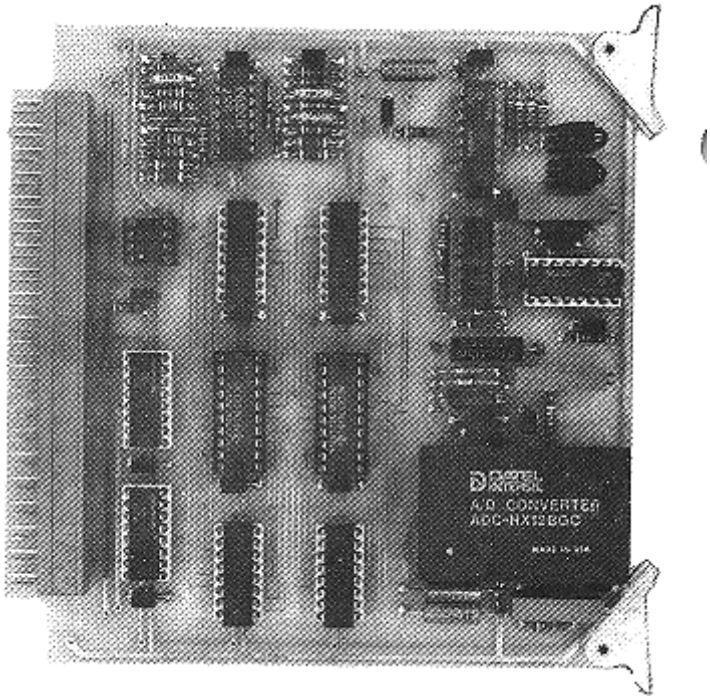

Figure 2-21.—ICs on a printed circuit board.

Integrated circuits have several advantages over conventional wired circuits of discrete components. These advantages include (1) a drastic reduction in size and weight, (2) a large increase in reliability, (3) lower cost, and (4) possible improvement in circuit performance. However, integrated circuits are

composed of parts so closely associated with one another that repair becomes almost impossible. In case of trouble, the entire circuit is replaced as a single component.

Basically, there are two general classifications of integrated circuits: HYBRID and MONOLITHIC. In the monolithic integrated circuit, all elements (resistors, transistors, etc.) associated with the circuit are fabricated inseparably within a continuous piece of material (called the SUBSTRATE), usually silicon. The monolithic integrated circuit is made very much like a single transistor. While one part of the crystal is being doped to form a transistor, other parts of the crystal are being acted upon to form the associated resistors and capacitors. Thus, all the elements of the complete circuit are created in the crystal by the same processes and in the same time required to make a single transistor. This produces a considerable cost savings over the same circuit made with discrete components by lowering assembly costs.

Hybrid integrated circuits are constructed somewhat differently from the monolithic devices. The PASSIVE components (resistors, capacitors) are deposited onto a substrate (foundation) made of glass, ceramic, or other insulating material. Then the ACTIVE components (diodes, transistors) are attached to the substrate and connected to the passive circuit components on the substrate using very fine (.001 inch) wire. The term hybrid refers to the fact that different processes are used to form the passive and active components of the device.

Hybrid circuits are of two general types: (1) thin film and (2) thick film. "Thin" and "thick" film refer to the relative thickness of the deposited material used to form the resistors and other passive components. Thick film devices are capable of dissipating more power, but are somewhat more bulky.

Integrated circuits are being used in an ever increasing variety of applications. Small size and weight and high reliability make them ideally suited for use in airborne equipment, missile systems, computers, spacecraft, and portable equipment. They are often easily recognized because of the unusual packages that contain the integrated circuit. A typical packaging sequence is shown in figure 2-22. These tiny packages protect and help dissipate heat generated in the device. One of these packages may contain one or several stages, often having several hundred components. Some of the most common package styles are shown in figure 2-23.

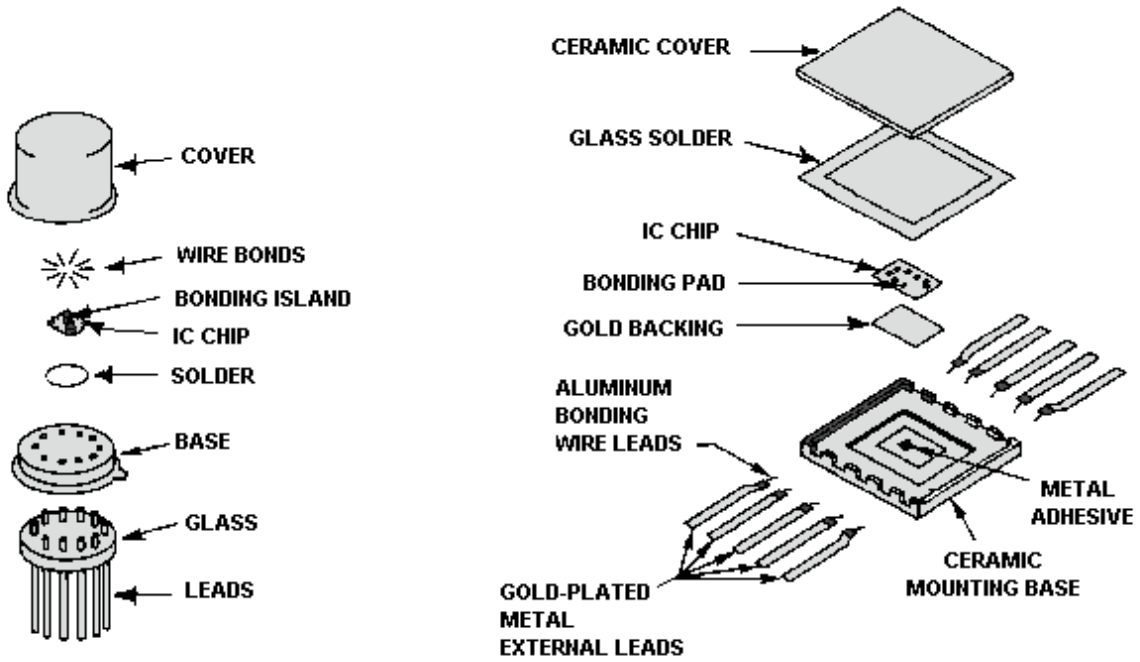

Figure 2-22.—A typical integrated circuit packaging sequence.

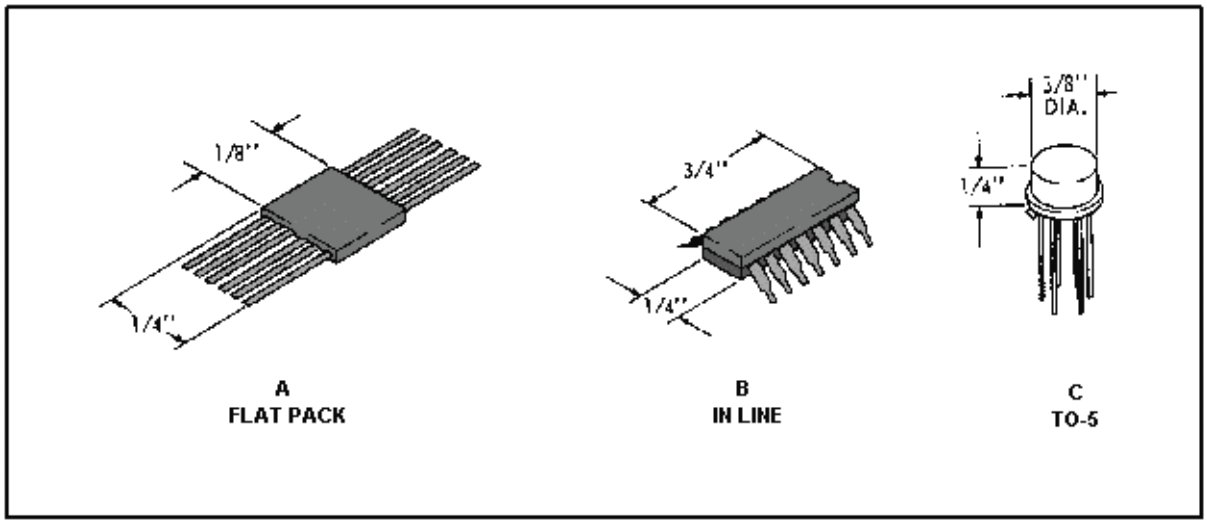

Figure 2-23.—Common IC packaging styles.

The preceding information was presented to give you a brief introduction into integrated circuits. If you wish to pursue this subject further, additional information is available in your ship's or station's library.

SUMMARY

Now that you have completed this chapter, a short review of the more important points covered in the chapter will follow. This review should refresh your memory of transistors, their theory of operation, and how they are tested with an ohmmeter.

A **TRANSISTOR** is a three or more element solid-state device that amplifies by controlling the flow of current carriers through its semiconductor materials.

The **THREE ELEMENTS OF A TRANSISTOR** are (1) the EMITTER, which gives off current carriers, (2) the BASE, which controls the carriers, and (3) the COLLECTOR, which collects the carriers.

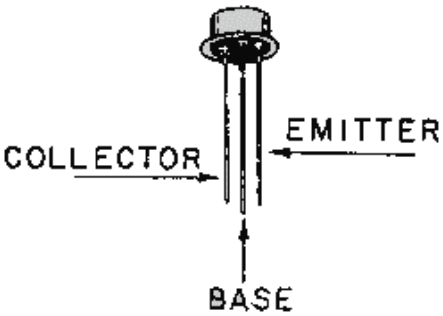

The two **BASIC TYPES** OF **TRANSISTORS** are the NPN and PNP. The only difference in symbology between the two transistors is the direction of the arrow on the emitter. If the arrow points in, it is a PNP transistor and if it points outward, it is an NPN transistor.

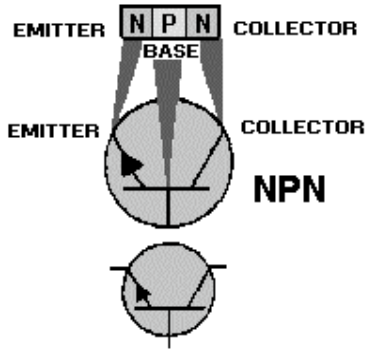

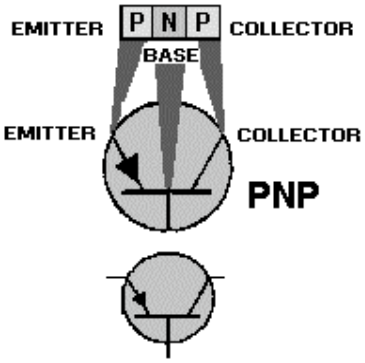

The four **TRANSISTOR MANUFACTURING PROCESSES** are the (1) point contact, (2) grown or rate-grown junction, (3) alloy or fused junction, and (4) diffused junction.

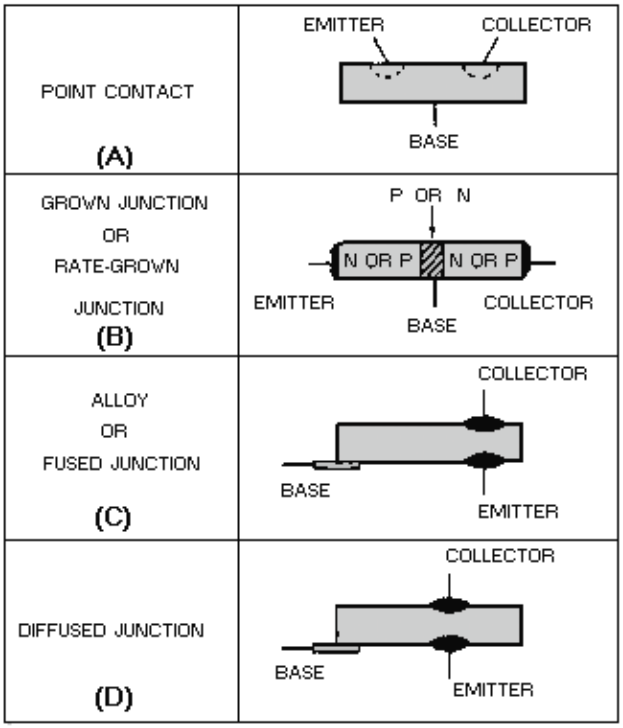

The **PROPER BIASING OF A TRANSISTOR** enables the transistor to be used as an amplifier. To function in this capacity, the emitter-to-base junction of the transistor is forward biased, while the base-to-collector junction is reverse biased.

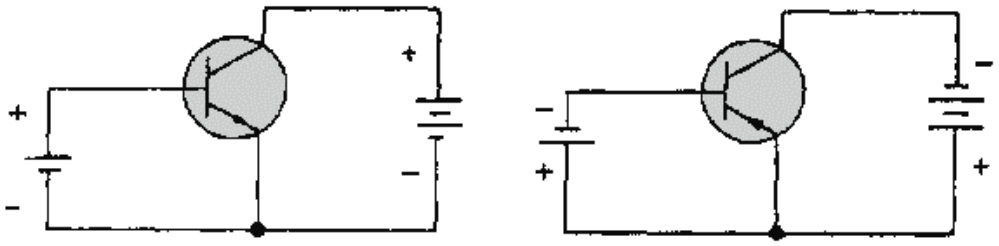

NPN TRANSISTOR OPERATION is basically the action of a relatively small emitter-base bias voltage controlling a relatively large emitter-to-collector current.

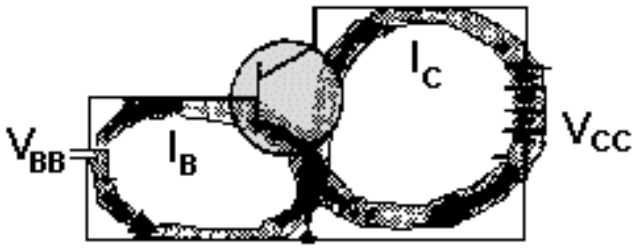

PNP TRANSISTOR OPERATION is essentially the same as the NPN operation except the majority current carriers are holes and the bias batteries are reversed.

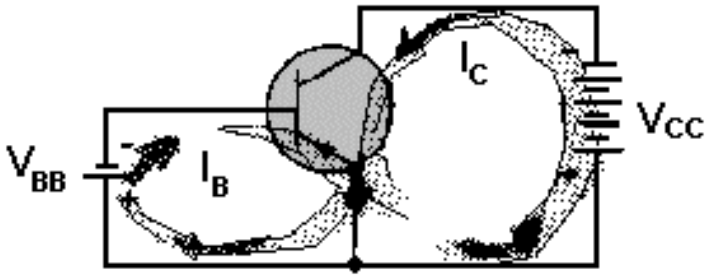

AMPLIFICATION is the process of increasing the strength of a signal.

An **AMPLIFIER** is the device that provides amplification without appreciably altering the original signal.

The **BASIC TRANSISTOR AMPLIFIER** amplifies by producing a large change in collector current for a small change in base current. This action results in voltage amplification because the load resistor placed in series with the collector reacts to these large changes in collector current which, in turn, results in large variations in the output voltage.

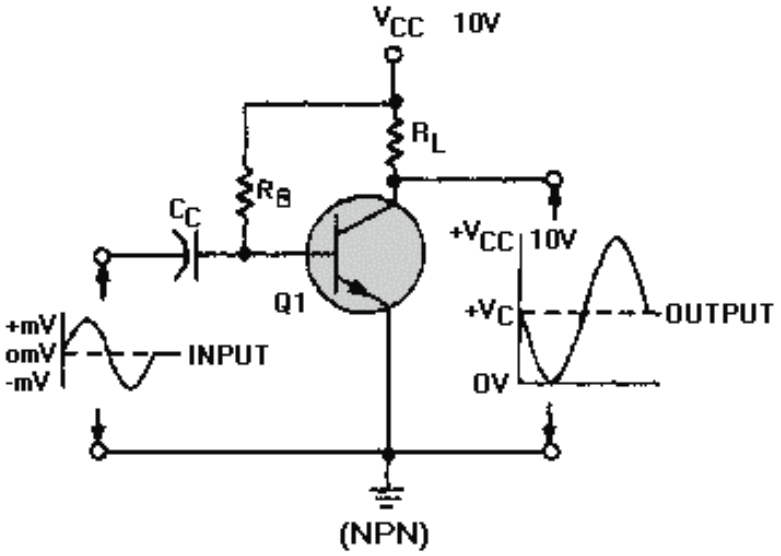

The three types of BIAS used to properly bias a transistor are base-current bias (fixed bias), self-bias, and combination bias.

Combination bias is the one most widely used because it improves circuit stability and at the same time overcomes some of the disadvantages of base-current bias and self-bias.

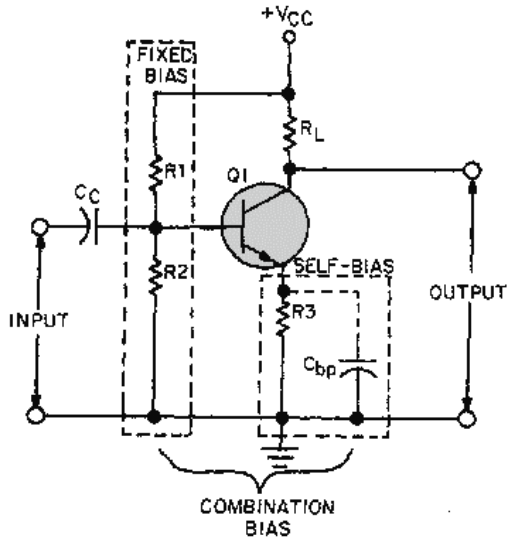

THE CLASS OF AMPLIFIER OPERATION is determined by the portion of the input signal for which there is an output.

There are four classes of amplifier operations: class A, class AB, class B, and class C.

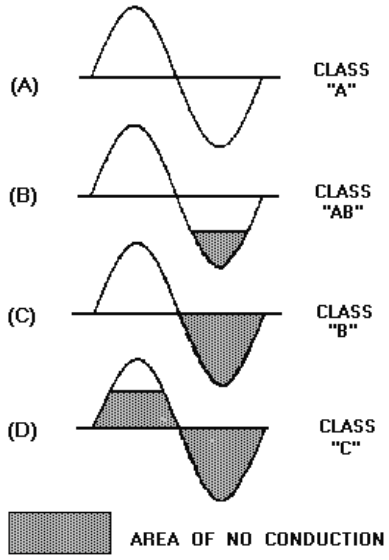

CUTOFF occurs when the base-to-emitter bias prevents current from flowing in the emitter circuit. For example, in the PNP transistor, if the base becomes positive with respect to the emitter, holes are repelled at the emitter-base junction. This prevents current from flowing in the collector circuit.

SATURATION occurs in a PNP transistor when the base becomes so negative, with respect to the emitter, that changes in the signal are not reflected in collector-current flow.

CLASS A AMPLIFIERS are biased so that variations in input signal polarities occur within the limits of cutoff and saturation. Biasing an amplifier in this manner allows collector current to flow during the complete cycle (360 degrees) of the input signal, thus providing an output which is a replica of the input but 180 degrees out of phase.

Class A operated amplifiers are used as audio- and radio-frequency amplifiers in radio, radar, and sound systems.

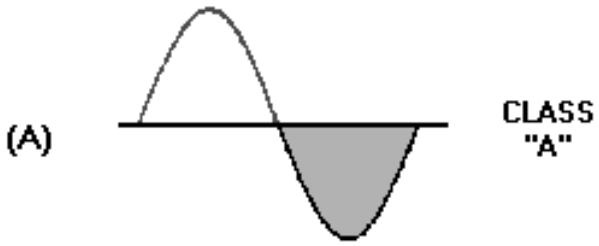

CLASS AB AMPLIFIERS are biased so that collector current is zero (cutoff) for a portion of one alternation of the input signal. Therefore, collector current will flow for more than 180 degrees but less than 360 degrees of the input signal. The class AB amplifier is commonly used as a push-pull amplifier to overcome a side effect of class B operations.

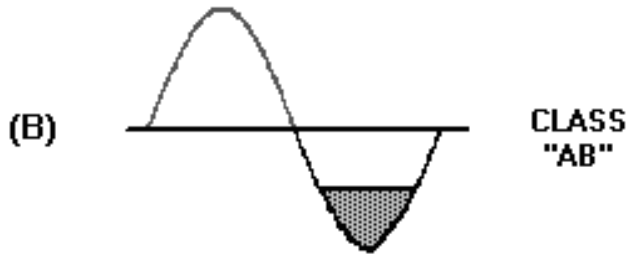

CLASS B AMPLIFIERS are biased so that collector current is cut off during one-half of the input signal. Thus, for a class B operation, collector current will flow for approximately 180 degrees (half) of the input signal.

The class B operated amplifier is used as an audio amplifier and sometimes as the driver- and power-amplifier stage of transmitters.

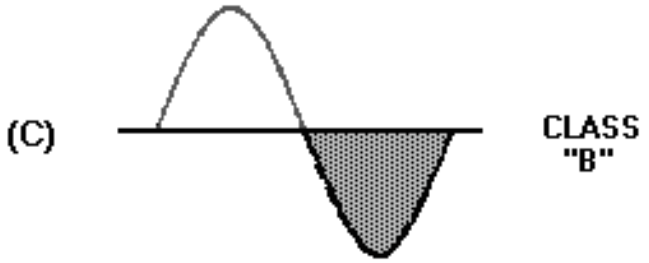

CLASS C AMPLIFIERS are biased so that collector current flows for less than one-half cycle of the input signal.

The class C operated amplifier is used as a radio-frequency amplifier in transmitters.

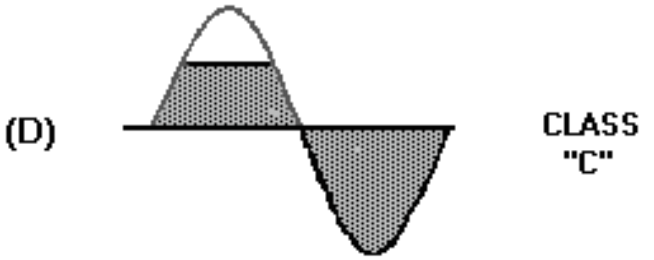

FIDELITY and **EFFICIENCY** are two terms used in conjunction with amplifiers. Fidelity is the faithful reproduction of a signal, while efficiency is the ratio of output signal power compared to the total input power.

The class A amplifier has the highest degree of fidelity, but the class C amplifier has the highest efficiency.

A **TRANSISTOR CONFIGURATION** is the particular way a transistor is connected in a circuit. A transistor may be connected in any one of three different configurations: common emitter (CE), common base (CB), and common collector (CC).

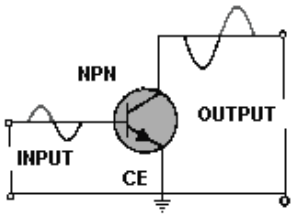

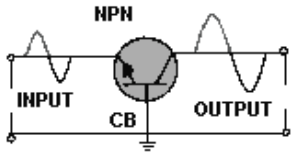

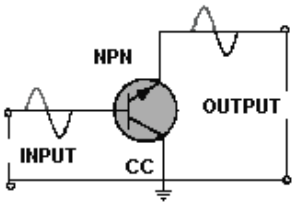

The **COMMON-EMITTER CONFIGURATION (CE)** is the most frequently used configuration in practical amplifier circuits, since it provides good voltage, current, and power gain. The input to the CE is applied to the base-emitter circuit and the output is taken from the collector-emitter circuit, making the emitter the element "common" to both input and output. The CE is set apart from the other configurations, because it is the only configuration that provides a phase reversal between input and output signals.

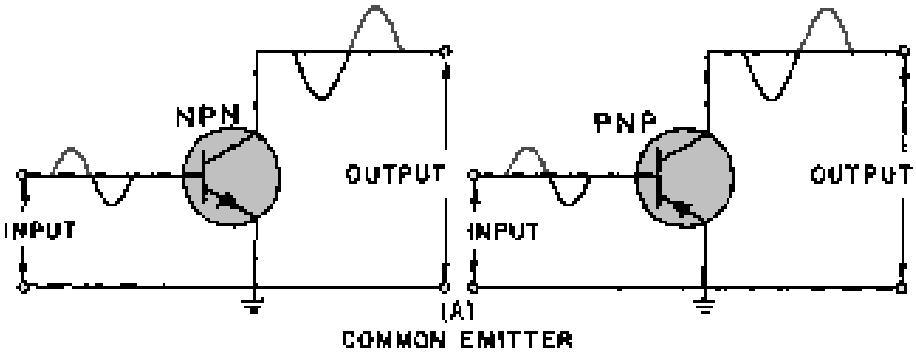

The **COMMON-BASE CONFIGURATION (CB)** is mainly used for impedance matching, since it has a low input resistance and a high output resistance. It also has a current gain of less than 1.

In the CB, the input is applied to the emitter, the output is taken from the collector, and the base is the element common to both input and output.

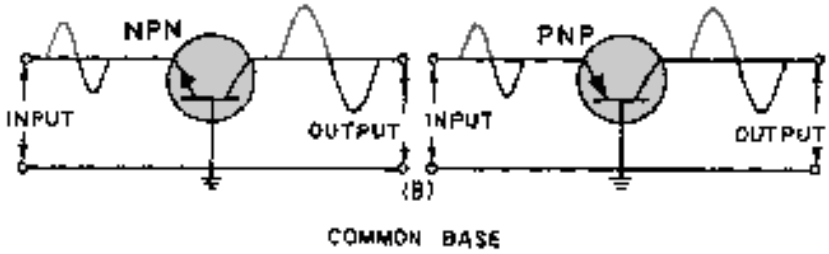

The **COMMON-COLLECTOR CONFIGURATION (CC)** is used as a current driver for impedance matching and is particularly useful in switching circuits. The CC is also referred to as an emitter-follower and is equivalent to the electron-tube cathode follower. Both have high input impedance and low output impedance.

In the CC, the input is applied to the base, the output is taken from the emitter, and the collector is the element common to both input and output.

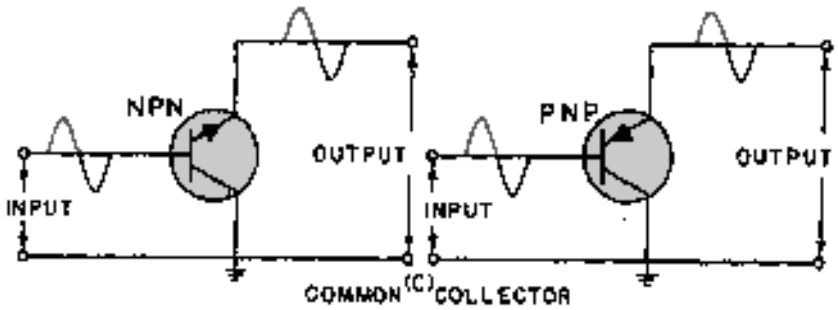

GAIN is a term used to describe the amplification capabilities of an amplifier. It is basically a ratio of output to input. The current gain for the three transistor configurations (CB, CE, and CC) are ALPHA (α), BETA (β), and GAMMA (γ), respectively.

$$\alpha = \frac{\Delta I_C}{\Delta I_E}$$

$$\beta = \frac{\Delta I_C}{\Delta I_B}$$

$$\gamma = \frac{\Delta I_E}{\Delta I_B}$$

The **TRANSISTOR CONFIGURATION COMPARISON CHART** gives a rundown of the different properties of the three configurations.

AMPLIFIER TYPE	COMMON BASE	COMMON EMITTER	COMMON COLLECTOR
INPUT/OUTPUT PHASE RELATIONSHIP	0º	180º	0º
VOLTAGE GAIN	HIGH	MEDIUM	LOW
CURRENT GAIN	LOW(α)	MEDIUM(β)	HIGH(γ)
POWER GAIN	LOW	HIGH	MEDIUM
INPUT RESISTANCE	LOW	MEDIUM	HIGH
OUTPUT RESISTANCE	HIGH	MEDIUM	LOW

TRANSISTOR CHARACTERISTICS are usually presented on specification sheets. These sheets usually cover the following items:

1. The kind of transistor.
2. The absolute maximum ratings of the transistor.
3. The typical operating values of the transistor.
4. Additional engineering/design information.

TRANSISTORS ARE IDENTIFIED by a Joint Army-Navy (JAN) designation printed directly on the case of the transistor. If in doubt about a transistor's markings, always replace a transistor with one having identical markings, or consult an equipment or transistor manual to ensure that an identical replacement or substitute is used.

2	N	130	A
NUMBER OF JUNCTIONS (TRANSISTOR)	SEMI-CONDUCTOR	IDENTIFICATION NUMBER	FIRST MODIFICATION

TESTING A TRANSISTOR to determine if it is good or bad can be done with an ohmmeter or transistor tester or by the substitution method.

PRECAUTIONS should be taken when working with transistors since they are susceptible to damage by electrical overloads, heat, humidity, and radiation.

TRANSISTOR LEAD IDENTIFICATION plays an important part in transistor maintenance because before a transistor can be tested or replaced, its leads must be identified. Since there is NO standard method of identifying transistor leads, check some typical lead identification schemes or a transistor manual before attempting to replace a transistor.

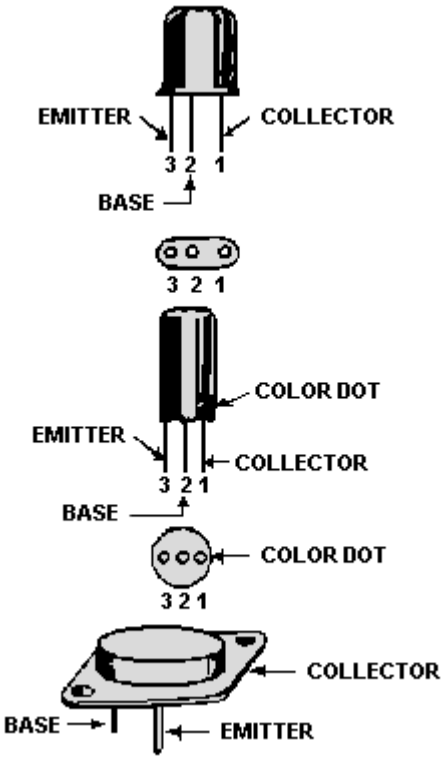

A **TRANSISTOR GAIN TEST** can be made using an ohmmeter and a simple test circuit. The principle behind this test lies in the fact that little or no current will flow in a transistor between emitter and collector until the emitter-base junction is forward biased.

A 10-to-1 resistance ratio in the test between meter readings indicates normal gain.

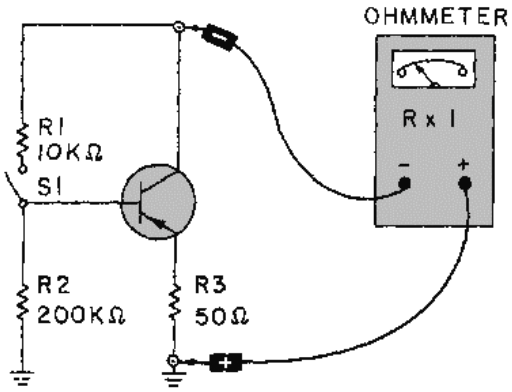

TRANSISTOR JUNCTION RESISTANCE TEST can also be made using an ohmmeter by measuring the base-emitter, base-collector, and collector-emitter forward and reverse resistances.

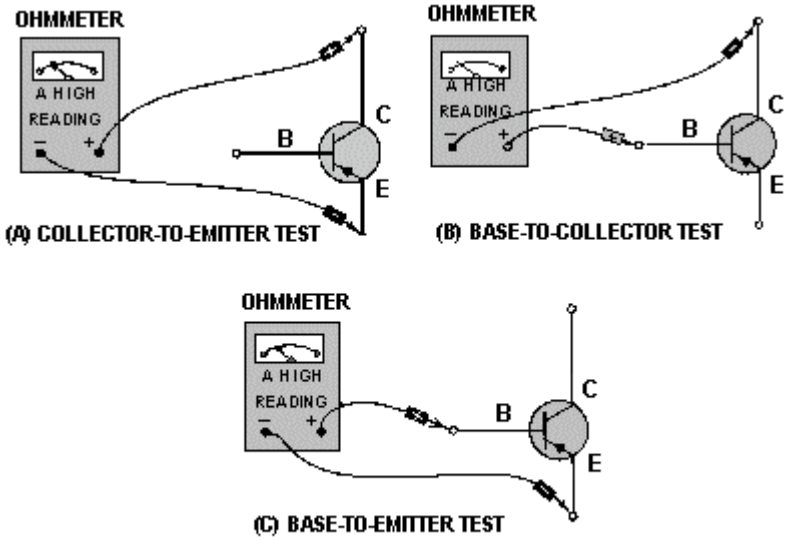

NOTE: Reversing the meter leads will give a low reading.

MICROELECTRONICS is a broad term used to describe the use of integrated circuits to miniaturize electronic equipment.

A PRINTED CIRCUIT BOARD (PCB) is a flat, insulating surface upon which printed wiring and miniaturized components are connected in a predetermined design and attached to a common base.

MODULAR CIRCUITRY is an assembly technique in which printed circuit boards are stacked and connected together to form a module. This technique increases the packaging density of circuit components and results in a considerable reduction in the size of electronic equipment.

An **INTEGRATED CIRCUI**T is a device that integrates (combines) both active components (transistors, diodes, etc.) and passive components (resistors, capacitors, etc.) of a complete electronic circuit in a single chip.

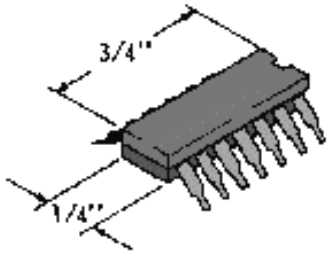

The two basic types of ICs are the **HYBRID** and the **MONOLITHIC**.

In the **MONOLITHIC IC**, all elements (resistors, transistors, etc.) associated with the circuit are fabricated inseparably with a continuous piece of material (called the substrate).

In the **HYBRID IC**, the passive components (resistors, capacitors) are deposited onto a substrate (foundation) made of glass, ceramic, or other insulating material. Then the active components (diodes, transistors) are attached to the substrate and connected to the passive components using fine wire.

ANSWERS TO QUESTIONS Q1. THROUGH Q42.

A1. Transistor

A2. Amplification.

A3. Outward.

A4. Point-contact.

A5. Quality control.

A6. Positive, more positive.

A7. Because the N material on one side of the forward-biased junction is more heavily doped than the P-material.

A8. The P or base section.

A9. 98 percent.

A10. Holes.

A11. The polarity of voltage applied to the PNP transistor is opposite of that applied to the NPN transistor

A12. I_B.

A13. The base current loop and the collector current loop.

A14. Amplifier.

A15. Compensation for slight variations in transistor characteristics and changes in transistor conduction because of temperature variations.

A16. The signals are opposite in polarity or 180 degrees out of phase with each other.

A17. The polarity of the source voltage.

A18. Base current bias or fixed bias.

A19. Self-bias.

A20. When it is necessary to prevent amplitude distortion.

A21. The voltage-divider type.

A22. Class A.

A23. Cutoff.

A24. The amount of bias and the amplitude of the input signal.

A25. Class A.

A26. Common emitter (CE), common base (CB), and common collector (CC).

A27. Common emitter.

A28. Base current (I_B).

A29. Alpha (α).

A30. Common base.

A31. I_E.

A32. Common collector.

A33.

$$\gamma = \frac{I_E}{I_B}$$

A34. The kind of transistor, the transistor's common applications, and mechanical data.

A35. The number of junctions in the device, which in this case indicates a transistor.

A36. Heat.

A37. The substitution method.

A38. The power must be removed from the circuit.

A39. By the wide space between the collector lead and the other two leads (emitter and base).

A40. Gain and junction resistance.

A41. Normal gain.

A42. A leaking transistor

CHAPTER 3

SPECIAL DEVICES

LEARNING OBJECTIVES

Upon completion of this chapter, you will be able to:

1. Explain the basic operation and the major applications of the Zener diode.
2. Describe the basic operation of the tunnel diode and the varactor.
3. Explain the basic operation of the silicon controlled rectifier and the TRIAC, and compare the advantages and disadvantages of each.
4. List the five most commonly used optoelectronic devices and explain the uses of each.
5. Describe the basic operation, applications, and major advantages of the unijunction transistor.
6. Describe the basic operation, applications, and major advantages of the field effect transistor and the metal oxide semiconductor field effect transistor.
7. Explain the basic operation and the major applications of the Zener diode.
8. Describe. the basic operation of the tunnel diode and the varactor.
9. Explain the basic operation of the silicon controlled rectifier and the TRIAC, and compare the advantages and disadvantages of each.
10. List the five most commonly used optoelectronic devices and explain the uses of each.
11. Describe the basic operation, applications, and major advantages of the unijunction transistor.
12. Describe the basic operation, applications, and major advantages of the field-effect transistor and the metal-oxide semiconductor field-effect transistor.

INTRODUCTION TO SPECIAL DEVICES

If you consider the sensitive nature and the various interacting properties of semiconductors, it should not be surprising to you that solid state devices can be designed for many different purposes. In fact, devices with special features are so numerous and new designs are so frequently introduced that it would be beyond the scope of this chapter to describe all of the devices in use today. Therefore, this chapter will include a variety of representative devices that are used extensively in Navy equipment to give you an idea of the diversity and versatility that have been made possible. These devices have been grouped into three categories: diodes, optoelectronic devices, and transistors. In this chapter each device will be described and the basic operation of each one will be discussed.

DIODES

Diodes are two terminal semiconductors of various types that are used in seemingly endless applications. The operation of normal PN-junction diodes has already been discussed, but there are a number of diodes with special properties with which you should be familiar. A discussion of all of the developments in the diode field would be impossible so some of the more commonly used special diodes have been selected for explanation. These include Zener diodes, tunnel diodes, varactors, silicon controlled rectifiers (SCR), and TRIACs.

Zener Diodes

When a PN-junction diode is reverse biased, the majority carriers (holes in the P-material and electrons in the N-material) move away from the junction. The barrier or depletion region becomes wider, as illustrated in figure 3-1, (view A, view B, view C) and majority carrier current flow becomes very difficult across the high resistance of the wide depletion region. The presence of minority carriers causes a small leakage current that remains nearly constant for all reverse voltages up to a certain value. Once this value has been exceeded, there is a sudden increase in the reverse current. The voltage at which the sudden increase in current occurs is called the BREAKDOWN VOLTAGE. At breakdown, the reverse current increases very rapidly with a slight increase in the reverse voltage. Any diode can be reverse biased to the point of breakdown, but not every diode can safely dissipate the power associated with breakdown. A Zener diode is a PN junction designed to operate in the reverse-bias breakdown region.

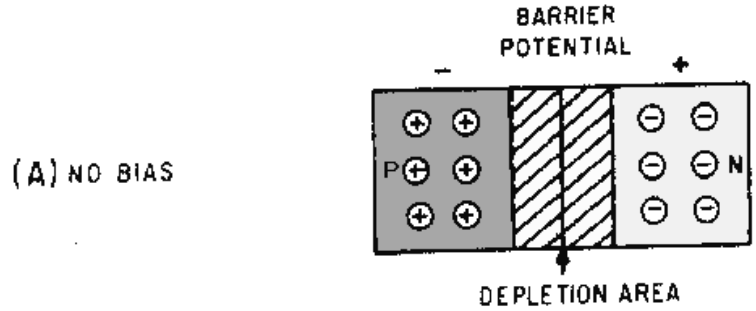

Figure 3-1A.—Effects of bias on the depletion region of a PN junction.

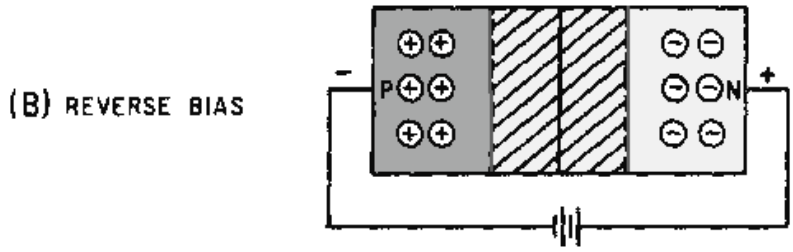

Figure 3-1B.—Effects of bias on the depletion region of a PN junction.

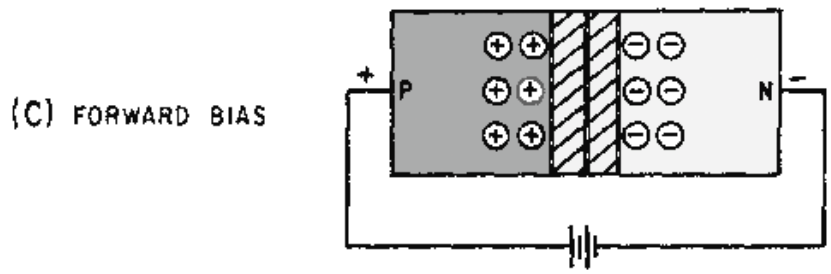

Figure 3-1C.—Effects of bias on the depletion region of a PN junction.

There are two distinct theories used to explain the behavior of PN junctions during breakdown: one is the ZENER EFFECT and the other is the AVALANCHE EFFECT.

The ZENER EFFECT was first proposed by Dr. Carl Zener in 1934. According to Dr. Zener's theory, electrical breakdown in solid dielectrics occurs by a process called QUANTUM-MECHANICAL TUNNELING. The Zener effect accounts for the breakdown below 5 volts; whereas, above 5 volts the breakdown is caused by the avalanche effect. Although the avalanche effect is now accepted as an explanation of diode breakdown, the term *Zener diode* is used to cover both types.

The true Zener effect in semiconductors can be described in terms of energy bands; however, only the two upper energy bands are of interest. The two upper bands, illustrated in figure 3-2, view A, are called the conduction band and the valence band.

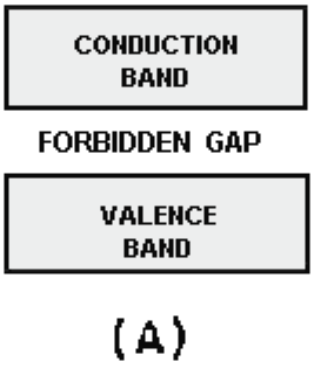

Figure 3-2A.-Energy diagram for Zener diode.

The CONDUCTION BAND is a band in which the energy level of the electrons is high enough that the electrons will move easily under the influence of an external field. Since current flow is the movement of electrons, the readily mobile electrons in the conduction band are capable of maintaining a current flow when an external field in the form of a voltage is applied. Therefore, solid materials that have many electrons in the conduction band are called conductors.

The VALENCE BAND is a band in which the energy level is the same as the valence electrons of the atoms. Since the electrons in these levels are attached to the atoms, the electrons are not free to move around as are the conduction band electrons. With the proper amount of energy added, however, the electrons in the valence band may be elevated to the conduction band energy level. To do this, the electrons must cross a gap that exists between the valence band energy level and the conduction band energy level. This gap is known as the FORBIDDEN ENERGY BAND or FORBIDDEN GAP. The

energy difference across this gap determines whether a solid material will act as a conductor, a semiconductor, or an insulator.

A conductor is a material in which the forbidden gap is so narrow that it can be considered nonexistent. A semiconductor is a solid that contains a forbidden gap, as shown in figure 3-2, view A. Normally, a semiconductor has no electrons at the conduction band energy level. The energy provided by room temperature heat, however, is enough energy to overcome the binding force of a few valence electrons and to elevate them to the conduction band energy level. The addition of impurities to the semiconductor material increases both the number of free electrons in the conduction band and the number of electrons in the valence band that can be elevated to the conduction band. Insulators are materials in which the forbidden gap is so large that practically no electrons can be given enough energy to cross the gap. Therefore, unless extremely large amounts of heat energy are available, these materials will not conduct electricity.

View B of figure 3-2 is an energy diagram of a reverse-biased Zener diode. The energy bands of the P and N materials are naturally at different levels, but reverse bias causes the valence band of the P material to overlap the energy level of the conduction band in the N material. Under this condition, the valence electrons of the P material can cross the extremely thin junction region at the overlap point without acquiring any additional energy. This action is called tunneling. When the breakdown point of the PN junction is reached, large numbers of minority carriers "tunnel" across the junction to form the current that occurs at breakdown. The tunneling phenomenon only takes place in heavily doped diodes such as Zener diodes.

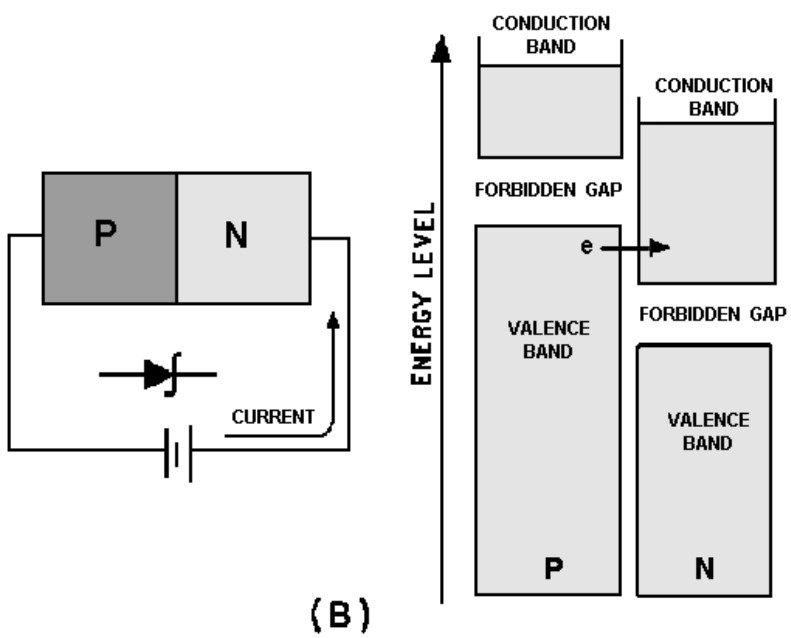

Figure 3-2B.-Energy diagram for Zener diode.

The second theory of reverse breakdown effect in diodes is known as AVALANCHE breakdown and occurs at reverse voltages beyond 5 volts. This type of breakdown diode has a depletion region that is deliberately made narrower than the depletion region in the normal PN-junction diode, but thicker than that in the Zener-effect diode. The thicker depletion region is achieved by decreasing the doping level from the level used in Zener-effect diodes. The breakdown is at a higher voltage because of the higher

resistivity of the material. Controlling the doping level of the material during the manufacturing process can produce breakdown voltages ranging between about 2 and 200 volts.

The mechanism of avalanche breakdown is different from that of the Zener effect. In the depletion region of a PN junction, thermal energy is responsible for the formation of electron-hole pairs. The leakage current is caused by the movement of minority electrons, which is accelerated in the electric field across the barrier region. As the reverse voltage across the depletion region is increased, the reverse voltage eventually reaches a critical value. Once the critical or breakdown voltage has been reached, sufficient energy is gained by the thermally released minority electrons to enable the electrons to rupture covalent bonds as they collide with lattice atoms. The released electrons are also accelerated by the electric field, resulting in the release of further electrons, and so on, in a chain or avalanche effect. This process is illustrated in figure 3-3.

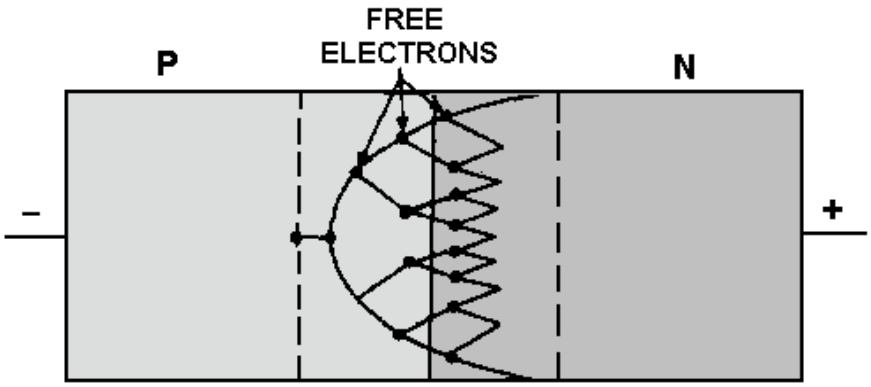

Figure 3-3.—Avalanche multiplication.

For reverse voltage slightly higher than breakdown, the avalanche effect releases an almost unlimited number of carriers so that the diode essentially becomes a short circuit. The current flow in this region is limited only by an external series current-limiting resistor. Operating a diode in the breakdown region does not damage it, as long as the maximum power dissipation rating of the diode is not exceeded. Removing the reverse voltage permits all carriers to return to their normal energy values and velocities.

Some of the symbols used to represent Zener diodes are illustrated in figure 3-4 (view A, view B, view C, view D, and view E). Note that the polarity markings indicate electron flow is with the arrow symbol instead of against it as in a normal PN-junction diode. This is because breakdown diodes are operated in the reverse-bias mode, which means the current flow is by minority current carriers.

Figure 3-4A.—Schematic symbols for Zener diodes.

Figure 3-4B.—Schematic symbols for Zener diodes.

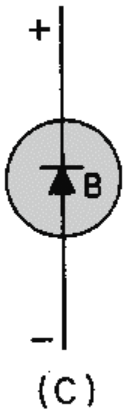

Figure 3-4C.—Schematic symbols for Zener diodes.

Figure 3-4D.—Schematic symbols for Zener diodes.

Figure 3-4E.—Schematic symbols for Zener diodes.

Zener diodes of various sorts are used for many purposes, but their most widespread use is as voltage regulators. Once the breakdown voltage of a Zener diode is reached, the voltage across the diode remains almost constant regardless of the supply voltage. Therefore they hold the voltage across the load at a constant level. This characteristic makes Zener diodes ideal voltage regulators, and they are found in almost all solid-state circuits in this capacity.

Q1. In a reverse biased PN-junction, which current carriers cause leakage current?

Q2. The action of a PN-junction during breakdown can be explained by what two theories?

Q3. Which breakdown theory explains the action that takes place in a heavily doped PN-junction with a reverse bias of less than 5 volts?

Q4. What is the doping level of an avalanche effect diode when compared to the doping level of a Zener-effect diode?

Q5. During avalanche effect breakdown, what limits current flow through the diode?

Q6. Why is electron flow with the arrow in the symbol of a Zener diode instead of against the arrow as it is in a normal diode?

The Tunnel Diode

In 1958, Leo Esaki, a Japanese scientist, discovered that if a semiconductor junction diode is heavily doped with impurities, it will have a region of negative resistance. The normal junction diode uses semiconductor materials that are lightly doped with one impurity atom for ten-million semiconductor atoms. This low doping level results in a relatively wide depletion region. Conduction occurs in the normal junction diode only if the voltage applied to it is large enough to overcome the potential barrier of the junction.

In the TUNNEL DIODE, the semiconductor materials used in forming a junction are doped to the extent of one-thousand impurity atoms for ten-million semiconductor atoms. This heavy doping produces an extremely narrow depletion zone similar to that in the Zener diode. Also because of the heavy doping, a tunnel diode exhibits an unusual current-voltage characteristic curve as compared with that of an ordinary junction diode. The characteristic curve for a tunnel diode is illustrated in figure 3-5.

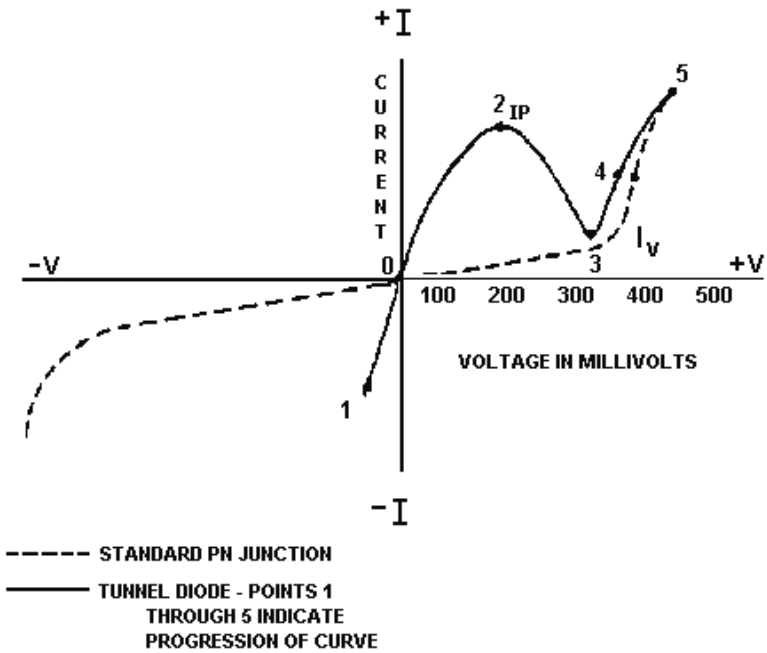

Figure 3-5.—Characteristic curve of a tunnel diode compared to that of a standard PN junction.

The three most important aspects of this characteristic curve are (1) the forward current increase to a peak (I_P) with a small applied forward bias, (2) the decreasing forward current with an increasing forward bias to a minimum valley current (I_V), and (3) the normal increasing forward current with further increases in the bias voltage. The portion of the characteristic curve between I_P and I_V is the region of negative resistance. An explanation of why a tunnel diode has a region of negative resistance is best understood by using energy levels as in the previous explanation of the Zener effect.

Simply stated the theory known as quantum-mechanical tunneling is an electron crossing a PN-junction without having sufficient energy to do so otherwise. Because of the heavy doping the width of

the depletion region is only one-millionth of an inch. You might think of the process simply as an arc-over between the N- and the P-side across the depletion region.

Figure 3-6 shows the equilibrium energy level diagram of a tunnel diode with no bias applied. Note in view A that the valence band of the P-material overlaps the conduction band of the N-material. The majority electrons and holes are at the same energy level in the equilibrium state. If there is any movement of current carriers across the depletion region due to thermal energy, the net current flow will be zero because equal numbers of current carriers flow in opposite directions. The zero net current flow is marked by a "0" on the current-voltage curve illustrated in view B.

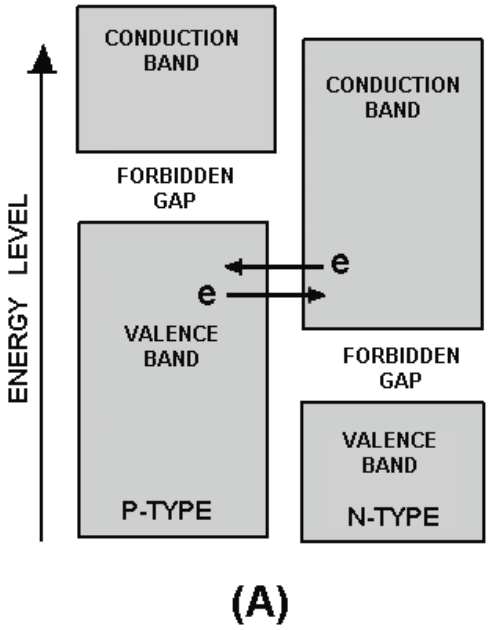

Figure 3-6A.—Tunnel diode energy diagram with no bias.

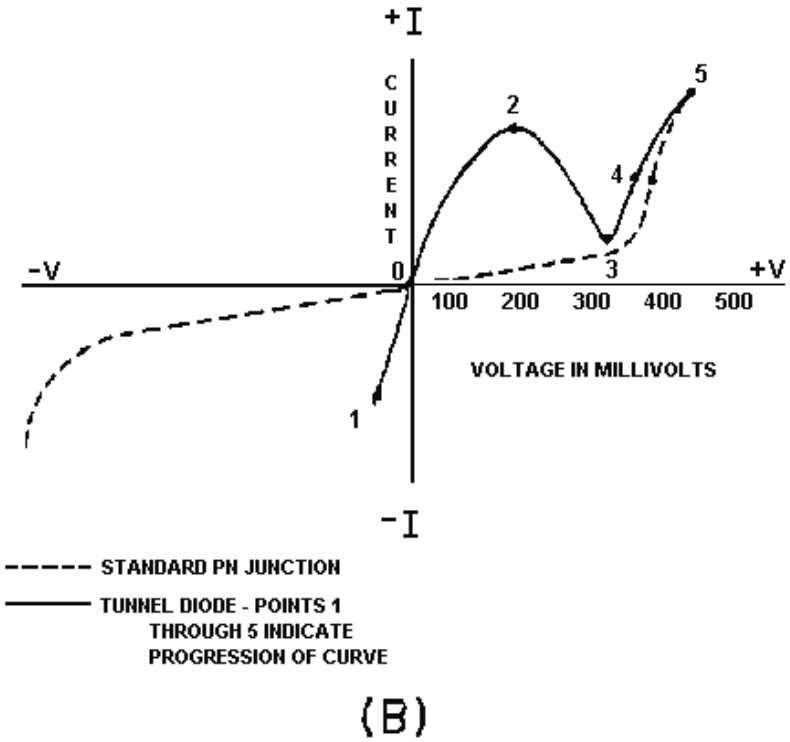

Figure 3-6B.—Tunnel diode energy diagram with no bias.

Figure 3-7, view A, shows the energy diagram of a tunnel diode with a small forward bias (50 millivolts) applied. The bias causes unequal energy levels between some of the majority carriers at the energy band overlap point, but not enough of a potential difference to cause the carriers to cross the forbidden gap in the normal manner. Since the valence band of the P-material and the conduction band of the N-material still overlap, current carriers tunnel across at the overlap and cause a substantial current flow. The amount of current flow is marked by point 2 on the curve in view B. Note in view A that the amount of overlap between the valence band and the conduction band decreased when forward bias was applied.

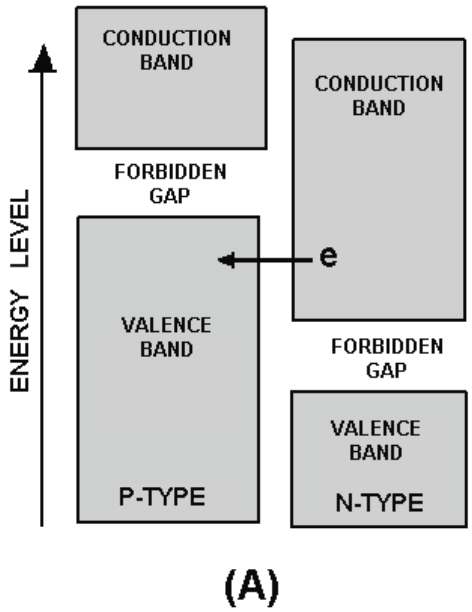

Figure 3-7A.—Tunnel diode energy diagram with 50 millivolts bias.

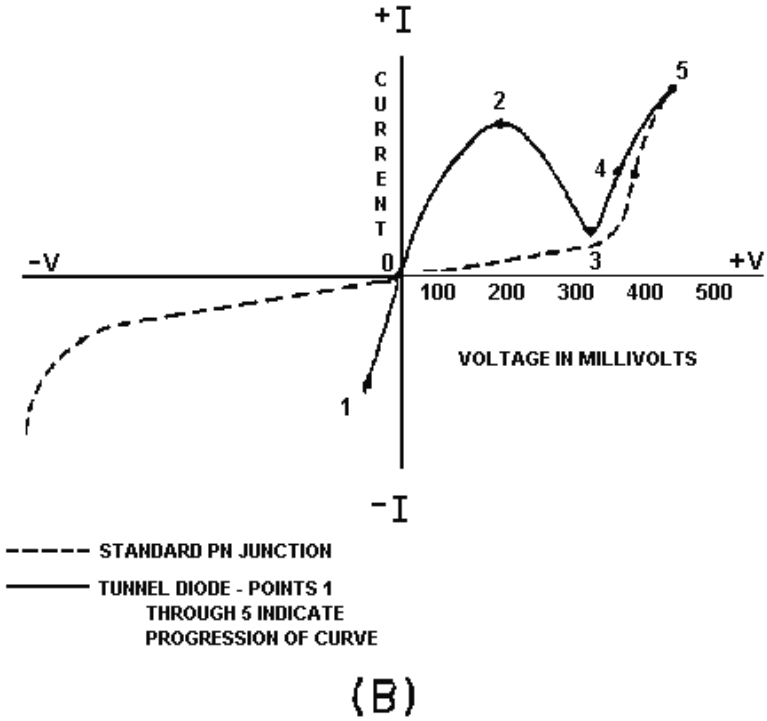

Figure 3-7B.—Tunnel diode energy diagram with 50 millivolts bias.

Figure 3-8, view A, is the energy diagram of a tunnel diode in which the forward bias has been increased to 450 millivolts. As you can see, the valence band and the conduction band no longer overlap at this point, and tunneling can no longer occur. The portion of the curve in view B from point 2 to point 3 shows the decreasing current that occurs as the bias is increased, and the area of overlap becomes

smaller. As the overlap between the two energy bands becomes smaller, fewer and fewer electrons can tunnel across the junction. The portion of the curve between point 2 and point 3 in which current decreases as the voltage increases is the negative resistance region of the tunnel diode.

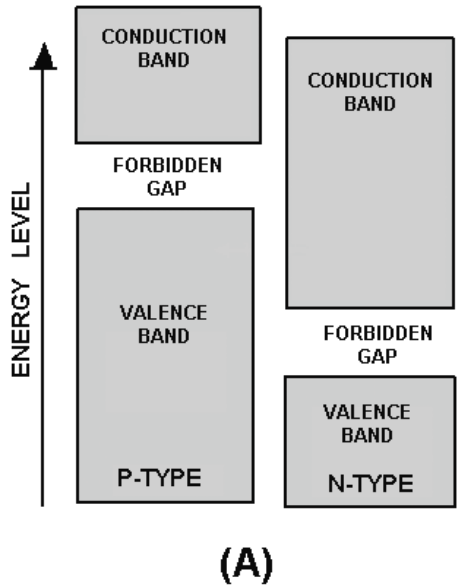

Figure 3-8A.—Tunnel diode energy diagram with 450 millivolts bias.

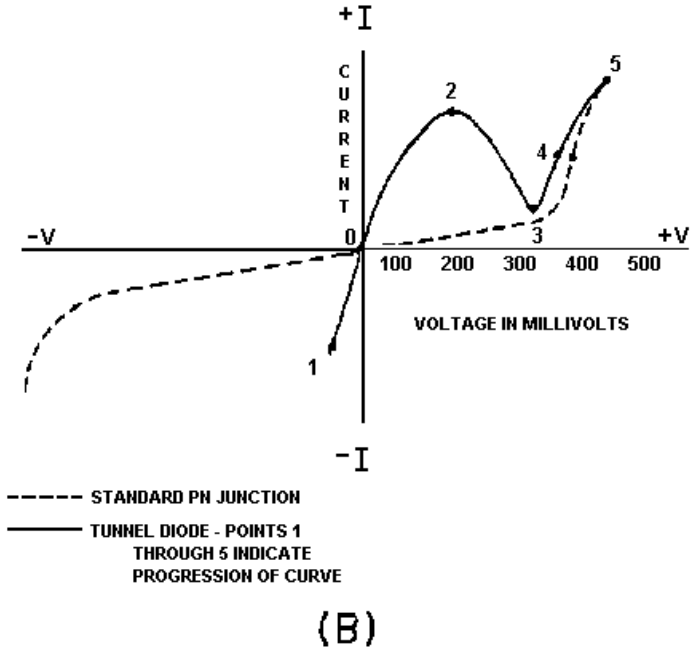

Figure 3-8B.—Tunnel diode energy diagram with 450 millivolts bias.

Figure 3-9, view A, is the energy diagram of a tunnel diode in which the forward bias has been increased even further. The energy bands no longer overlap and the diode operates in the same manner as a normal PN junction, as shown by the portion of the curve in view (B) from point 3 to point 4.

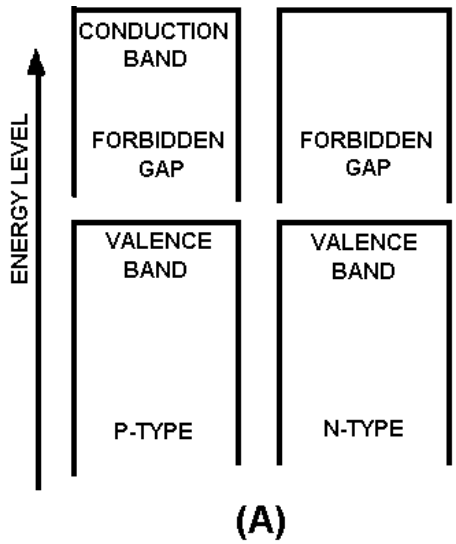

Figure 3-9A.—Tunnel diode energy diagram with 600 millivolts bias.

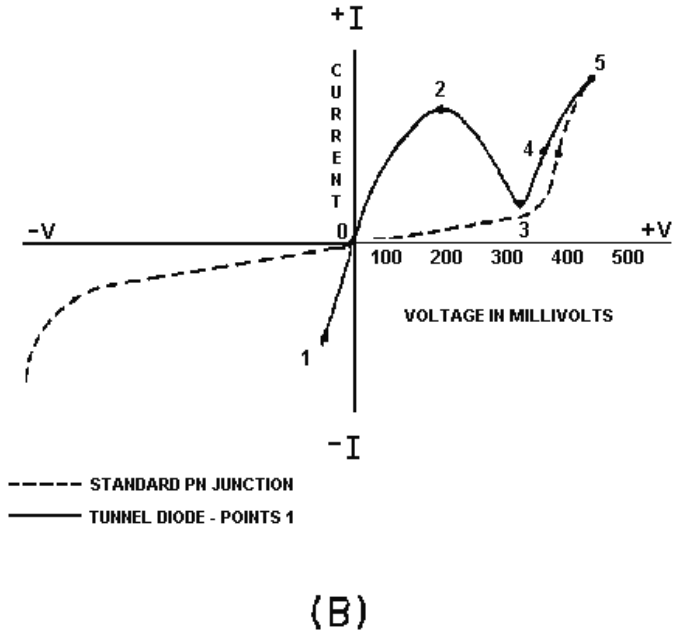

Figure 3-9B.—Tunnel diode energy diagram with 600 millivolts bias.

The negative resistance region is the most important and most widely used characteristic of the tunnel diode. A tunnel diode biased to operate in the negative resistance region can be used as either an oscillator or an amplifier in a wide range of frequencies and applications. Very high frequency applications using the tunnel diode are possible because the tunneling action occurs so rapidly that there is no transit time effect and therefore no signal distortion. Tunnel diodes are also used extensively in high-speed switching circuits because of the speed of the tunneling action.

Several schematic symbols are used to indicate a tunnel diode. These symbols are illustrated in figure 3-10 (view A, view B, view C, and view D).

Figure 3-10A.—Tunnel diode schematic symbols.

Figure 3-10B.—Tunnel diode schematic symbols.

Figure 3-10C.—Tunnel diode schematic symbols.

Figure 3-10D.—Tunnel diode schematic symbols.

Varactor

The VARACTOR, or varicap, as the schematic drawing in figure 3-11 suggests, is a diode that behaves like a variable capacitor, with the PN junction functioning like the dielectric and plates of a common capacitor. Understanding how the varactor operates is an important prerequisite to understanding field-effect transistors, which will be covered later in this topic.

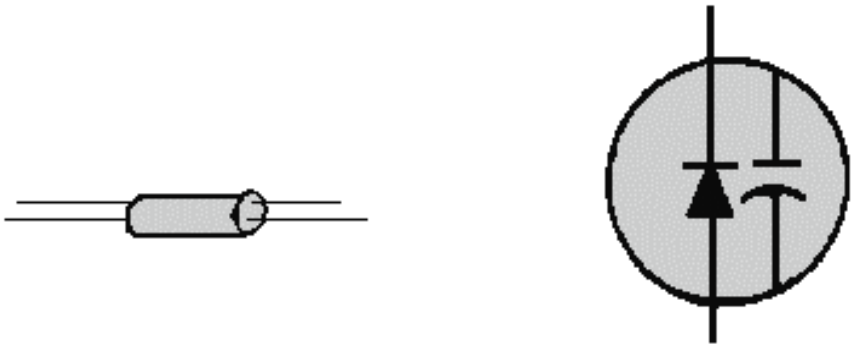

Figure 3-11.—Varactor diode.

Figure 3-12 shows a PN junction. Surrounding the junction of the P and N materials is a narrow region void of both positively and negatively charged current carriers. This area is called the depletion region.

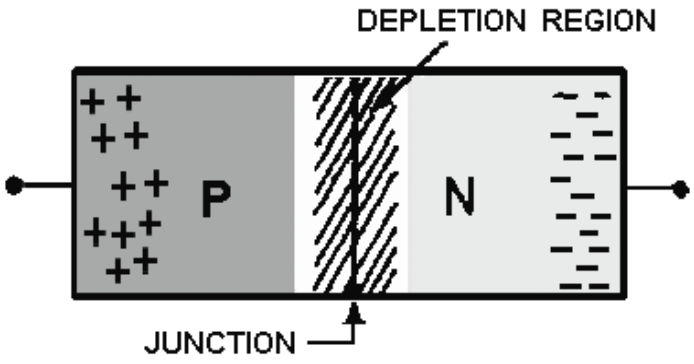

Figure 3-12.—PN junction.

The size of the depletion region in a varactor diode is directly related to the bias. Forward biasing makes the region smaller by repelling the current carriers toward the PN junction. If the applied voltage is large enough (about .5 volt for silicon material), the negative particles will cross the junction and join with the positive particles, as shown in figure 3-13. This forward biasing causes the depletion region to decrease, producing a low resistance at the PN junction and a large current flow across it. This is the condition for a forward-biased diode. On the other hand, if reverse-bias voltage is applied to the PN junction, the size of its depletion region increases as the charged particles on both sides move away from the junction. This condition, shown in figure 3-14, produces a high resistance between the terminals and allows little current flow (only in the microampere range). This is the operating condition for the varactor diode, which is nothing more than a special PN junction.

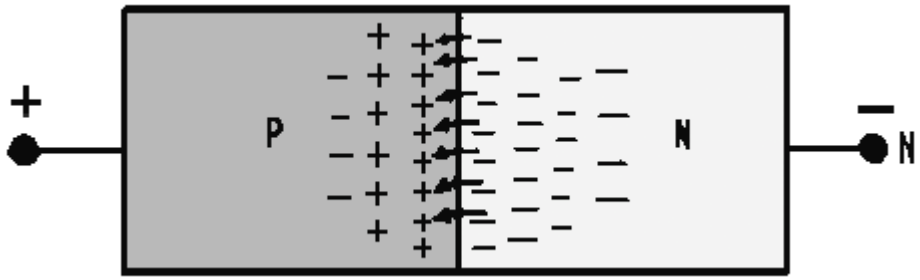

Figure 3-13.—Forward-biased PN junction.

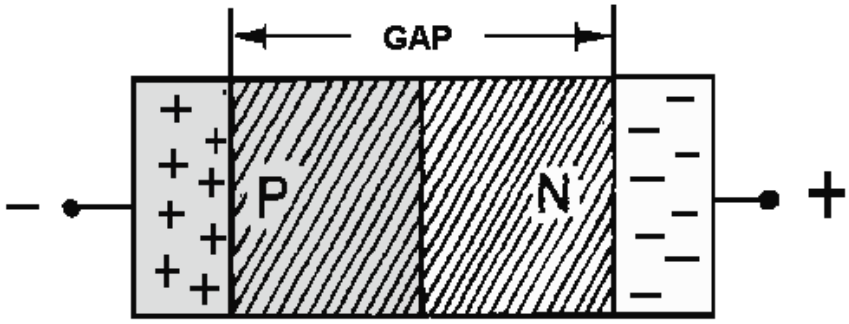

Figure 3-14.—Reverse-biased PN junction.

As the figure shows, the insulation gap formed by reverse biasing of the varactor is comparable to the layer of dielectric material between the plates of a common capacitor. Furthermore, the formula used to calculate capacitance

$$C = \frac{AK}{d}$$

Where

A = plate area

K = a constant value

d = distance between plates

can be applied to both the varactor and the capacitor. In this case, the size of the insulation gap of the varactor, or depletion region, is substituted for the distance between the plates of the capacitor. By varying the reverse-bias voltage applied to the varactor, the width of the "gap" may be varied. An increase in reverse bias increases the width of the gap (d) which reduces the capacitance (C) of the PN junction. Therefore, the capacitance of the varactor is inversely proportional to the applied reverse bias.

The ratio of varactor capacitance to reverse-bias voltage change may be as high as 10 to 1. Figure 3-15 shows one example of the voltage-to-capacitance ratio. View A shows that a reverse bias of 3 volts produces a capacitance of 20 picofarads in the varactor. If the reverse bias is increased to 6 volts, as shown in view B, the depletion region widens and capacitance drops to 5 picofarads. Each 1-volt increase in bias voltage causes a 5-picofarad decrease in the capacitance of the varactor; the ratio of change is therefore 5 to 1. Of course any decrease in applied bias voltage would cause a proportionate increase in capacitance, as the depletion region narrows. Notice that the value of the capacitance is small in the picofarad range.

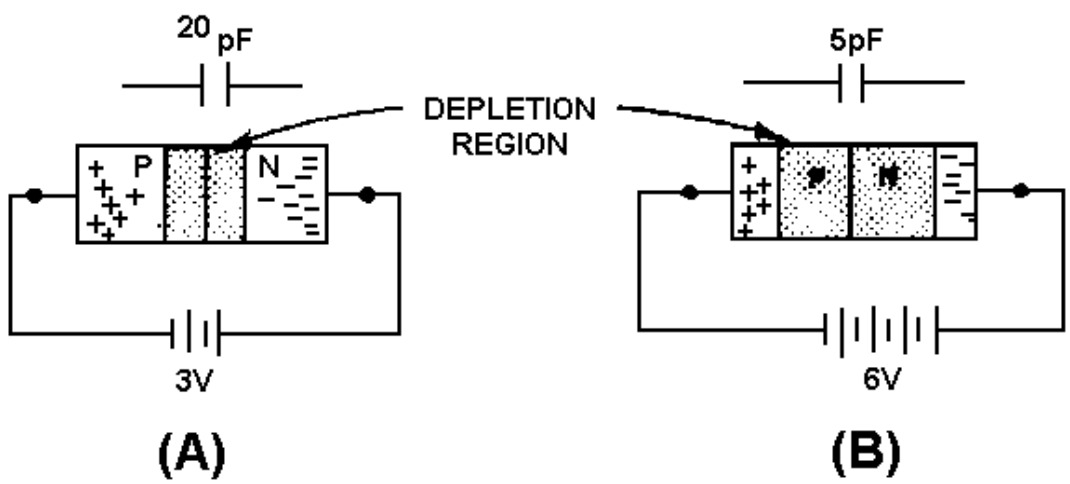

Figure 3-15.—Varactor capacitance versus bias voltage.

In general, varactors are used to replace the old style variable capacitor tuning. They are used in tuning circuits of more sophisticated communication equipment and in other circuits where variable capacitance is required. One advantage of the varactor is that it allows a dc voltage to be used to tune a circuit for simple remote control or automatic tuning functions. One such application of the varactor is as a variable tuning capacitor in a receiver or transmitter tank circuit like that shown in figure 3-16.

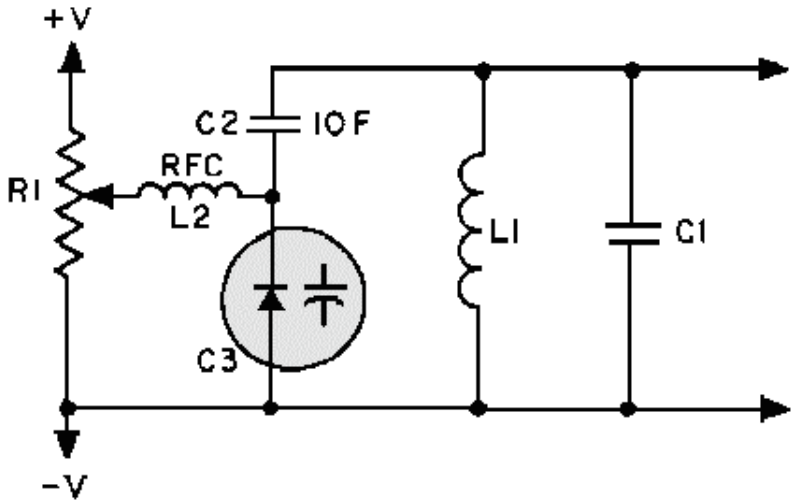

Figure 3-16.—Varactor tuned resonant circuit.

Figure 3-16 shows a dc voltage felt at the wiper of potentiometer R1 which can be adjusted between +V and −V. The dc voltage, passed through the low resistance of radio frequency choke L2, acts to reverse bias varactor diode C3. The capacitance of C3 is in series with C2, and the equivalent capacitance of C2 and C3 is in parallel with tank circuit L1-C1. Therefore, any variation in the dc voltage at R1 will vary both the capacitance of C3 and the resonant frequency of the tank circuit. The radio-frequency choke provides high inductive reactance at the tank frequency to prevent tank loading by R1. C2 acts to block dc from the tank as well as to fix the tuning range of C3.

An ohmmeter can be used to check a varactor diode in a circuit. A high reverse-bias resistance and a low forward-bias resistance with a 10 to 1 ratio in reverse-bias to forward-bias resistance is considered normal.

Q7. What is the main difference in construction between normal PN junction diodes and tunnel diodes?

Q8. What resistance property is found in tunnel diodes but not in normal diodes?

Q9. When compared to the ordinary diode, the tunnel diode has what type of depletion region?

Q10. In the tunnel diode, the tunneling current is at what level when the forbidden gap of the N-type material is at the same energy level as the empty states of the P-type material?

Q11. The varactor displays what useful electrical property?

Q12. When a PN junction is forward biased, what happens to the depletion region?

Q13. When the reverse bias on a varactor is increased, what happens to the effective capacitance?

Silicon Controlled Rectifier (SCR)

The SILICON CONTROLLED RECTIFIER, usually referred to as an SCR, is one of the family of semiconductors that includes transistors and diodes. A drawing of an SCR and its schematic representation is shown in views A and B of figure 3-17. Not all SCRs use the casing shown, but this is typical of most of the high-power units.

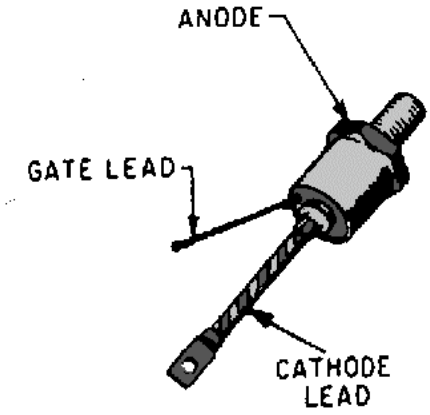

A. A HIGH POWER UNIT

Figure 3-17A.—Silicon controlled rectifier.

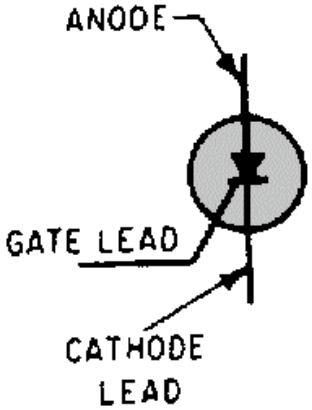

B. THE SCHEMATIC SYMBOL

Figure 3-17B.—Silicon controlled rectifier.

Although it is not the same as either a diode or a transistor, the SCR combines features of both. Circuits using transistors or rectifier diodes may be greatly improved in some instances through the use of SCRs.

The basic purpose of the SCR is to function as a switch that can turn on or off small or large amounts of power. It performs this function with no moving parts that wear out and no points that require replacing. There can be a tremendous power gain in the SCR; in some units a very small triggering current is able to switch several hundred amperes without exceeding its rated abilities. The SCR can often replace much slower and larger mechanical switches. It even has many advantages over its more complex and larger electron tube equivalent, the thyratron.

The SCR is an extremely fast switch. It is difficult to cycle a mechanical switch several hundred times a minute; yet, some SCRs can be switched 25,000 times a second. It takes just microseconds (millionths of a second) to turn on or off these units. Varying the time that a switch is on as compared to the time that it is off regulates the amount of power flowing through the switch. Since most devices can operate on pulses of power (alternating current is a special form of alternating positive and negative pulse), the SCR can be used readily in control applications. Motor-speed controllers, inverters, remote switching units, controlled rectifiers, circuit overload protectors, latching relays, and computer logic circuits all use the SCR.

The SCR is made up of four layers of semiconductor material arranged PNPN. The construction is shown in view A of figure 3-18. In function, the SCR has much in common with a diode, but the theory of operation of the SCR is best explained in terms of transistors.

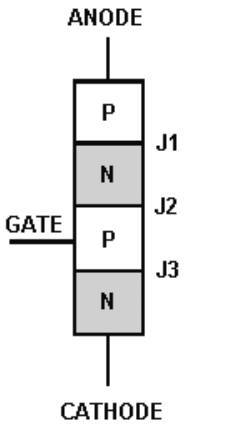

A. PARTS OF AN SCR

Figure 3-18A.—SCR structure.

Consider the SCR as a transistor pair, one PNP and the other NPN, connected as shown in views B and C. The anode is attached to the upper P-layer; the cathode, C, is part of the lower N-layer; and the gate terminal, G, goes to the P-layer of the NPN triode.

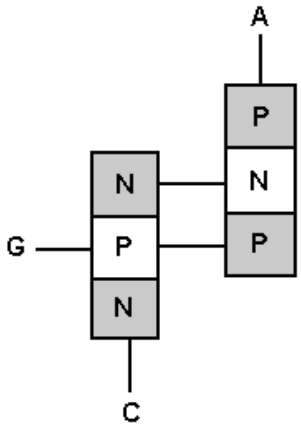

B. TWO-TRANSISTOR EQUIVALENT

Figure 3-18B.—SCR structure.

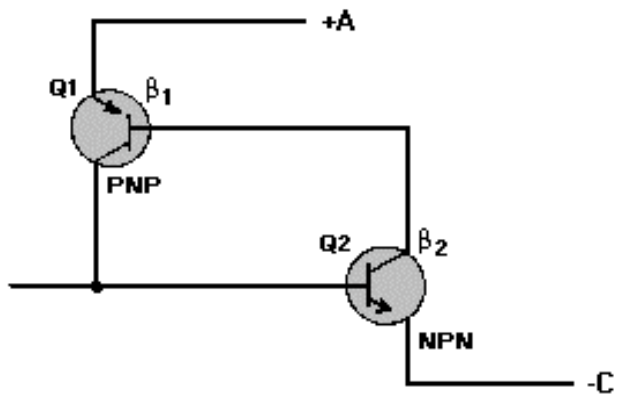

C. TWO-TRANSISTOR SCHEMATIC

Figure 3-18C.—SCR structure.

In operation the collector of Q2 drives the base of Q1, while the collector of Q1 feeds back to the base of Q2. (Beta) 1 is the current gain of Q1, and (Beta) 2 is the current gain of Q2. The gain of this positive feedback loop is their product, 1 times 2. When the product is less than one, the circuit is stable; if the product is greater than unity, the circuit is regenerative. A small negative current applied to terminal G will bias the NPN transistor into cutoff, and the loop gain is less than unity. Under these conditions, the only current that can exist between output terminals A and C is the very small cutoff collector current of the two transistors. For this reason the impedance between A and C is very high.

When a positive current is applied to terminal G, transistor Q2 is biased into conduction, causing its collector current to rise. Since the current gain of Q2 increases with increased collector current, a point (called the breakover point) is reached where the loop gain equals unity and the circuit becomes regenerative. At this point, collector current of the two transistors rapidly increases to a value limited only by the external circuit. Both transistors are driven into saturation, and the impedance between A and C is very low. The positive current applied to terminal G, which served to trigger the self-regenerative action, is no longer required since the collector of PNP transistor Q1 now supplies more than enough current to drive Q2. The circuit will remain on until it is turned off by a reduction in the collector current to a value below that necessary to maintain conduction.

The characteristic curve for the SCR is shown in figure 3-19. With no gate current, the leakage current remains very small as the forward voltage from cathode to anode is increased until the breakdown point is reached. Here the center junction breaks down, the SCR begins to conduct heavily, and the drop across the SCR becomes very low.

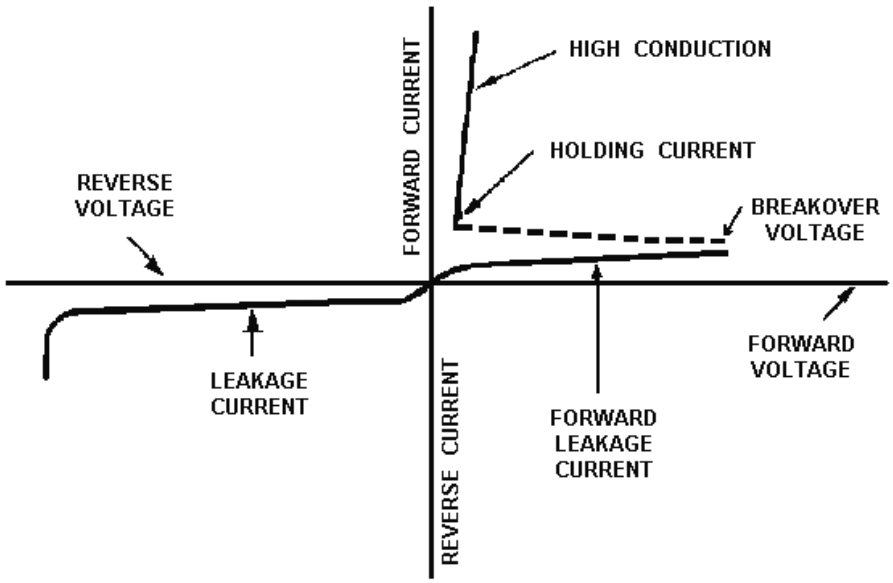

Figure 3-19.—Characteristic curve for an SCR.

The effect of a gate signal on the firing of an SCR is shown in figure 3-20. Breakdown of the center junction can be achieved at speeds approaching a microsecond by applying an appropriate signal to the gate lead, while holding the anode voltage constant. After breakdown, the voltage across the device is so low that the current through it from cathode to anode is essentially determined by the load it is feeding.

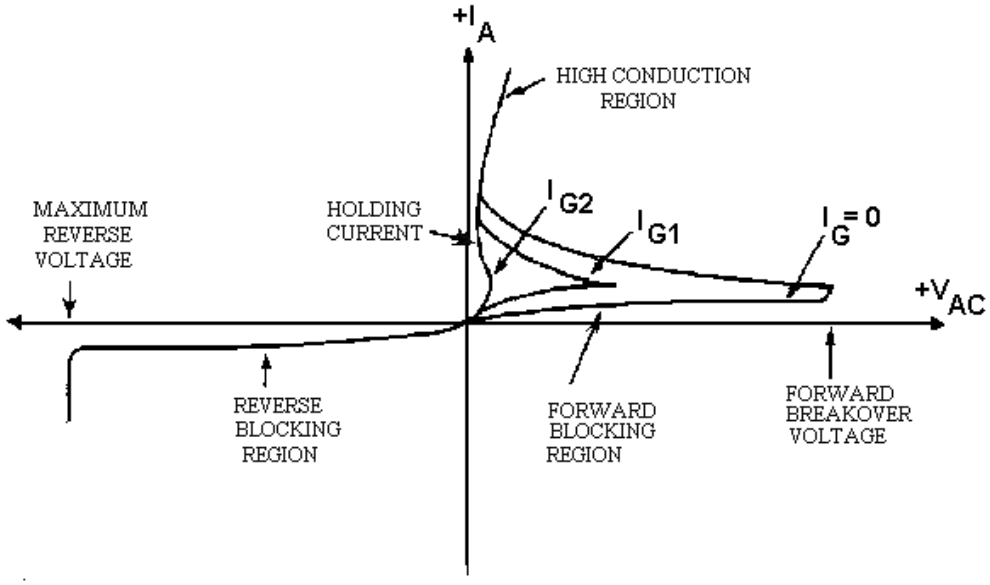

Figure 3-20.—SCR characteristic curve with various gate signals.

The important thing to remember is that a small current from gate to cathode can fire or trigger the SCR, changing it from practically an open circuit to a short circuit. The only way to change it back again (to commutate it) is to reduce the load current to a value less than the minimum forward-bias current. Gate current is required only until the anode current has completely built up to a point sufficient to sustain

conduction (about 5 microseconds in resistive-load circuits). After conduction from cathode to anode begins, removing the gate current has no effect.

The basic operation of the SCR can be compared to that of the thyratron. The thyratron is an electron tube, normally gas filled, that uses a filament or a heater. The SCR and the thyratron function in a very similar manner. Figure 3-21 shows the schematic of each with the corresponding elements labeled. In both types of devices, control by the input signal is lost after they are triggered. The control grid (thyratron) and the gate (SCR) have no further effect on the magnitude of the load current after conduction begins. The load current can be interrupted by one or more of three methods: (1) the load circuit must be opened by a switch, (2) the plate (anode) voltage must be reduced below the ionizing potential of the gas (thyratron), (3) the forward-bias current must be reduced below a minimum value required to sustain conduction (SCR). The input resistance of the SCR is relatively low (approximately 100 ohms) and requires a current for triggering; the input resistance of the thyratron is exceptionally high, and requires a voltage input to the grid for triggering action.

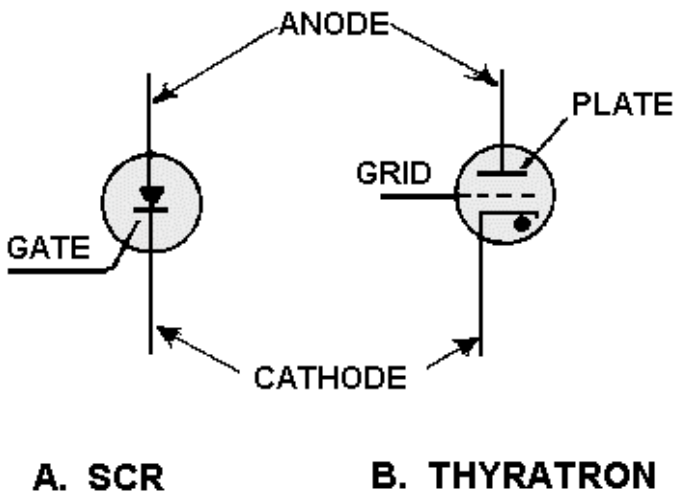

Figure 3-21.—Comparison of an SCR and a thyratron.

The applications of the SCR as a rectifier are many. In fact, its many applications as a rectifier give this semiconductor device its name. When alternating current is applied to a rectifier, only the positive or negative halves of the sine wave flow through. All of each positive or negative half cycle appears in the output. When an SCR is used, however, the controlled rectifier may be turned on at any time during the half cycle, thus controlling the amount of dc power available from zero to maximum, as shown in figure 3-22. Since the output is actually dc pulses, suitable filtering can be added if continuous direct current is needed. Thus any dc operated device can have controlled amounts of power applied to it. Notice that the SCR must be turned on at the desired time for each cycle.

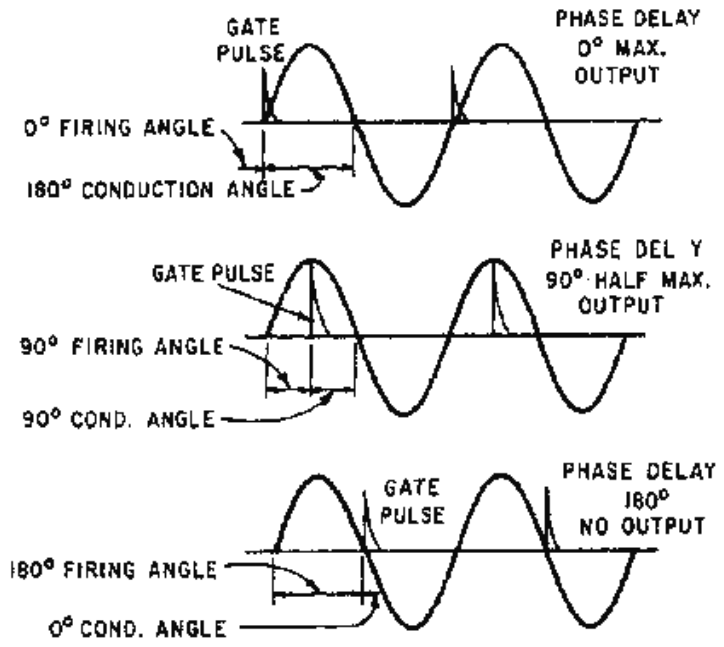

Figure 3-22.—SCR gate control signals.

When an ac power source is used, the SCR is turned off automatically, since current and voltage drop to zero every half cycle. By using one SCR on positive alternations and one on negative, full-wave rectification can be accomplished, and control is obtained over the entire sine wave. The SCR serves in this application just as its name implies—as a controlled rectifier of ac voltage.

Q14. The SCR is primarily used for what function?

Q15. When an SCR is forward biased, what is needed to cause it to conduct?

Q16. What is the only way to cause an SCR to stop conducting?

TRIAC

The TRIAC is a three-terminal device similar in construction and operation to the SCR. The TRIAC controls and conducts current flow during both alternations of an ac cycle, instead of only one. The schematic symbols for the SCR and the TRIAC are compared in figure 3-23. Both the SCR and the TRIAC have a gate lead. However, in the TRIAC the lead on the same side as the gate is "main terminal 1," and the lead opposite the gate is "main terminal 2." This method of lead labeling is necessary because the TRIAC is essentially two SCRs back to back, with a common gate and common terminals. Each terminal is, in effect, the anode of one SCR and the cathode of another, and either terminal can receive an input. In fact, the functions of a TRIAC can be duplicated by connecting two actual SCRs as shown in figure 3-24. The result is a three-terminal device identical to the TRIAC. The common anode-cathode connections form main terminals 1 and 2, and the common gate forms terminal 3.

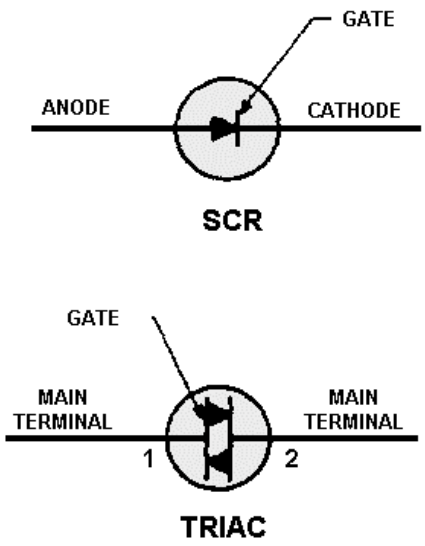

Figure 3-23.—Comparison of SCR and TRIAC symbols.

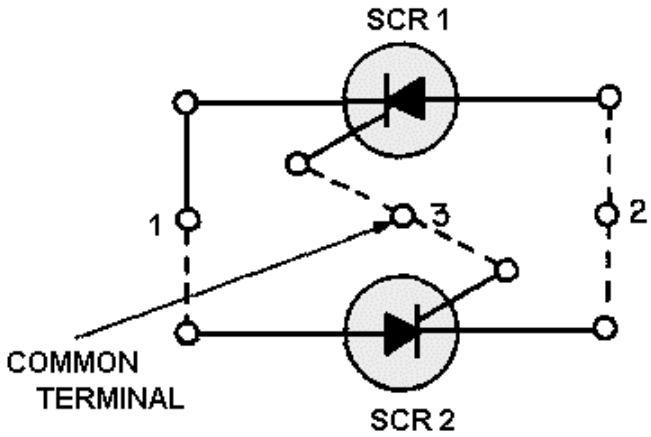

Figure 3-24.—Back to back SCR equivalent circuit.

The difference in current control between the SCR and the TRIAC can be seen by comparing their operation in the basic circuit shown in figure 3-25.

In the circuit shown in view A, the SCR is connected in the familiar half-wave arrangement. Current will flow through the load resistor (R_L) for one alternation of each input cycle. Diode CR1 is necessary to ensure a positive trigger voltage.

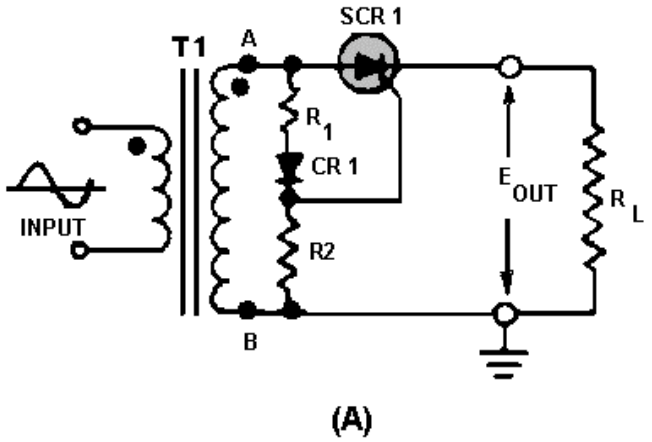

Figure 3-25A.—Comparison of SCR and TRIAC circuits.

In the circuit shown in view B, with the TRIAC inserted in the place of the SCR, current flows through the load resistor during both alternations of the input cycle. Because either alternation will trigger the gate of the TRIAC, CR1 is not required in the circuit. Current flowing through the load will reverse direction for half of each input cycle. To clarify this difference, a comparison of the waveforms seen at the input, gate, and output points of the two devices is shown in figure 3-26.

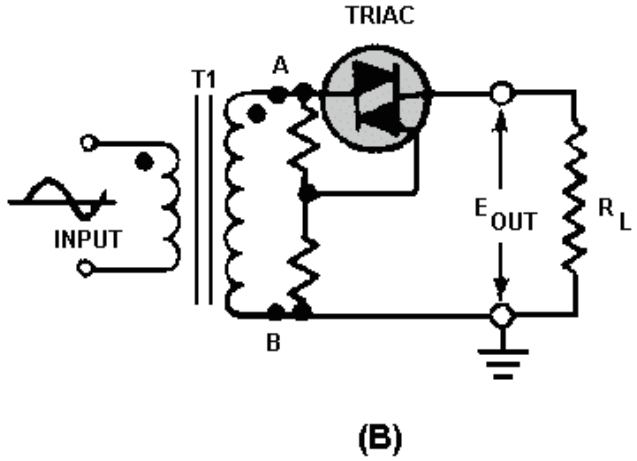

Figure 3-25B.—Comparison of SCR and TRIAC circuits.

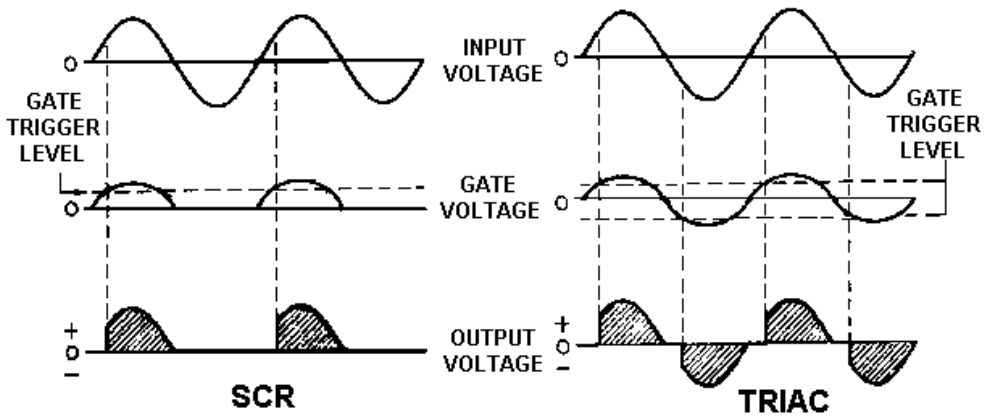

Figure 3-26.—Comparison of SCR and TRIAC waveforms.

Q17. The TRIAC is similar in operation to what device?

Q18. When used for ac current control, during which alternation of the ac cycle does the TRIAC control current flow?

Optoelectronic Devices

OPTOELECTRONIC devices either produce light or use light in their operation. The first of these, the light-emitting diode (LED), was developed to replace the fragile, short-life incandescent light bulbs used to indicate on/off conditions on panels. A LIGHT-EMITTING DIODE is a diode which, when forward biased, produces visible light. The light may be red, green, or amber, depending upon the material used to make the diode.

Figure 3-27 shows an LED and its schematic symbol. The LED is designated by a standard diode symbol with two arrows pointing away from the cathode. The arrows indicate light leaving the diode. The circuit symbols for all optoelectronic devices have arrows pointing either toward them, if they <u>use</u> light, or away from them, if they <u>produce</u> light. The LED operating voltage is small, about 1.6 volts forward bias and generally about 10 milliamperes. The life expectancy of the LED is very long, over 100,000 hours of operation.

Figure 3-27.—LED.

LEDs are used widely as "power on" indicators of current and as displays for pocket calculators, digital voltmeters, frequency counters, etc. For use in calculators and similar devices, LEDs are typically placed together in seven-segment displays, as shown in figure 3-28 (view A and view B). This display

uses seven LED segments, or bars (labeled A through G in the figure), which can be lit in different combinations to form any number from "0" through "9." The schematic, view A, shows a common-anode display. All anodes in a display are internally connected. When a negative voltage is applied to the proper cathodes, a number is formed. For example, if negative voltage is applied to all cathodes except that of LED "E," the number "9" is produced, as shown in view A of figure 3-29. If the negative voltage is changed and applied to all cathodes except LED "B," the number "9" changes to "6" as shown in view B.

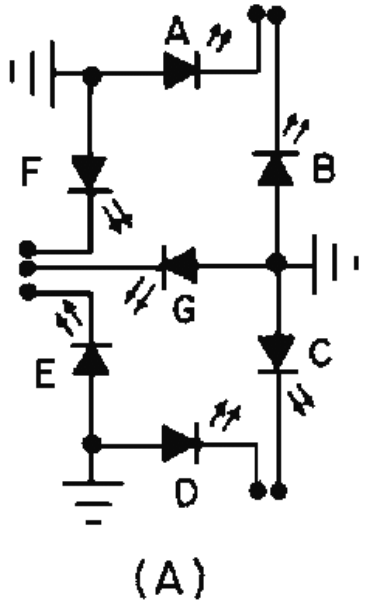

Figure 3-28A.—Seven-segment LED display.

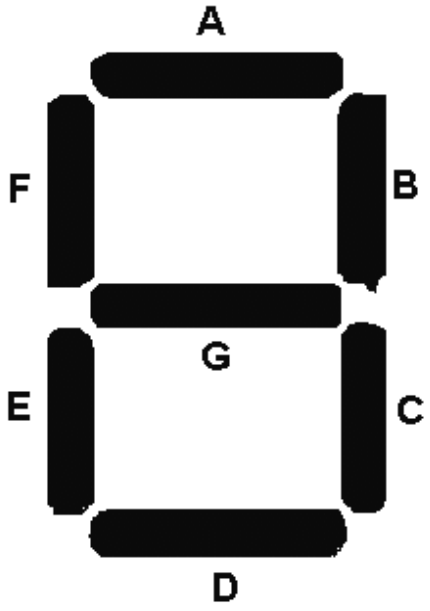

Figure 3-28B.—Seven-segment LED display.

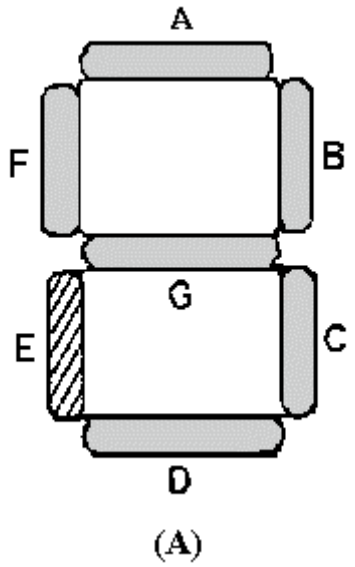

Figure 3-29A.—Seven-segment LED display examples.

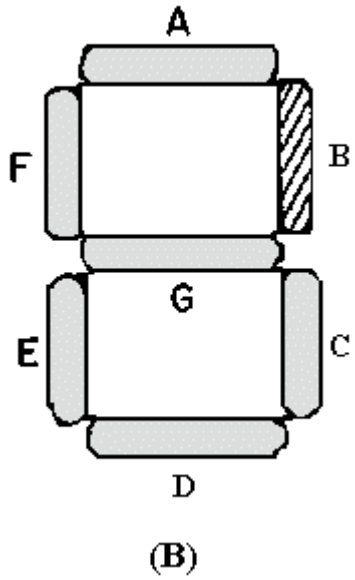

Figure 3-29B.—Seven-segment LED display examples.

Seven-segment displays are also available in common-cathode form, in which all cathodes are at the same potential. When replacing LED displays, you must ensure the replacement display is the same type as the faulty display. Since both types look alike, you should always check the manufacturer's number.

LED seven-segment displays range from the very small, often not much larger than standard typewritten numbers, to about an inch. Several displays may be combined in a package to show a series of numbers, such as the one shown in figure 3-30.

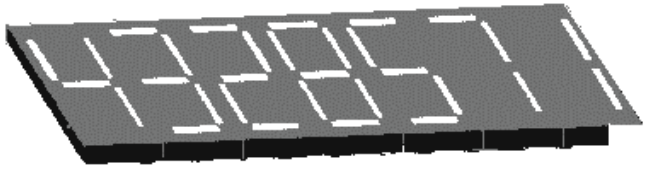

Figure 3-30.—Stacked seven-segment display.

Another special optoelectronic device in common use today is the photodiode. Unlike the LED, which produces light, the photodiode uses light to accomplish special circuit functions. Basically, the PHOTODIODE is a light-controlled variable resistor. In total darkness, it has a relatively high resistance and therefore conducts little current. However, when the PN junction is exposed to an external light source, internal resistance decreases and current flow increases. The photodiode is operated with reverse-bias and conducts current in direct proportion to the intensity of the light source.

Figure 3-31 shows a photodiode with its schematic symbol. The arrows pointing toward the symbol indicate that light is required for operation of the device. A light source is aimed at the photodiode through a transparent "window" placed over the semiconductor chip. Switching the light source on or off changes the conduction level of the photodiode. Varying the light intensity controls the amount of conduction. Because photodiodes respond quickly to changes in light intensity, they are extremely useful in digital applications such as computer card readers, paper tape readers, and photographic light meters. They are also used in some types of optical scanning equipment.

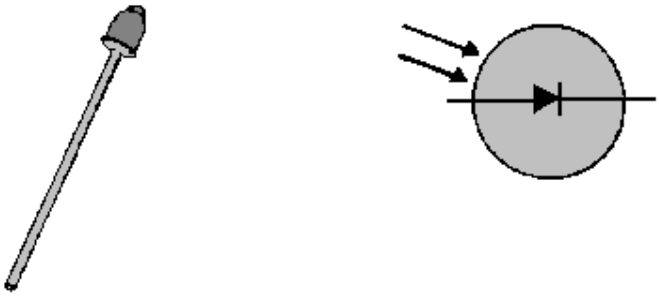

Figure 3-31.—Photodiode.

A second optoelectronic device that conducts current when exposed to light is the PHOTOTRANSISTOR. A phototransistor, however, is much more sensitive to light and produces more output current for a given light intensity that does a photodiode. Figure 3-32 shows one type of phototransistor, which is made by placing a photodiode in the base circuit of an NPN transistor. Light falling on the photodiode changes the base current of the transistor, causing the collector current to be amplified. Phototransistors may also be of the PNP type, with the photodiode placed in the base-collector circuit.

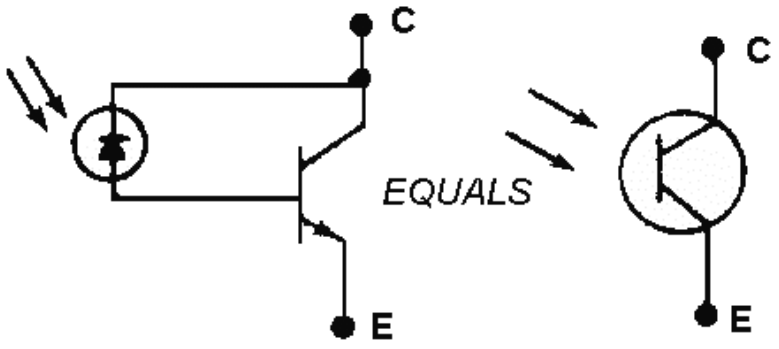

Figure 3-32.—Phototransistor.

Figure 3-33 illustrates the schematic symbols for the various types of phototransistors. Phototransistors may be of the two-terminal type, in which the light intensity on the photodiode alone determines the amount of conduction. They may also be of the three-terminal type, which have an added base lead that allows an electrical bias to be applied to the base. The bias allows an optimum transistor conduction level, and thus compensates for ambient (normal room) light intensity.

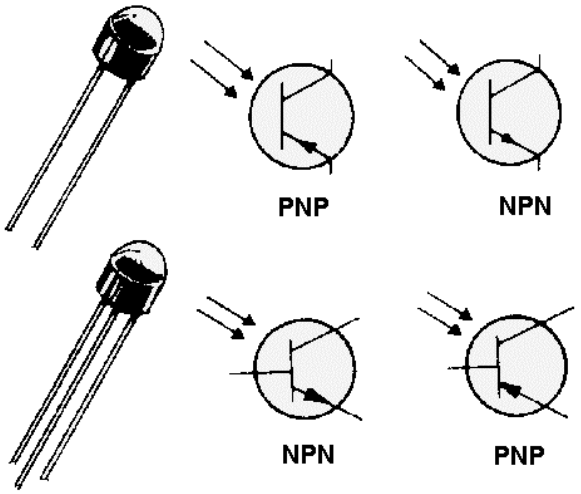

Figure 3-33.—2-terminal and 3-terminal phototransistors.

An older device that uses light in a way similar to the photodiode is the photoconductive cell, or PHOTOCELL, shown with its schematic symbol in figure 3-34. Like the photodiode, the photocell is a light-controlled variable resistor. However, a typical light-to-dark resistance ratio for a photocell is 1:1000. This means that its resistance could range from 1000 ohms in the light to 1000 kilohms in the dark, or from 2000 ohms in the light to 2000 kilohms in the dark, and so forth. Of course, other ratios are also available. Photocells are used in various types of control and timing circuits as, for example, the automatic street light controllers in most cities.

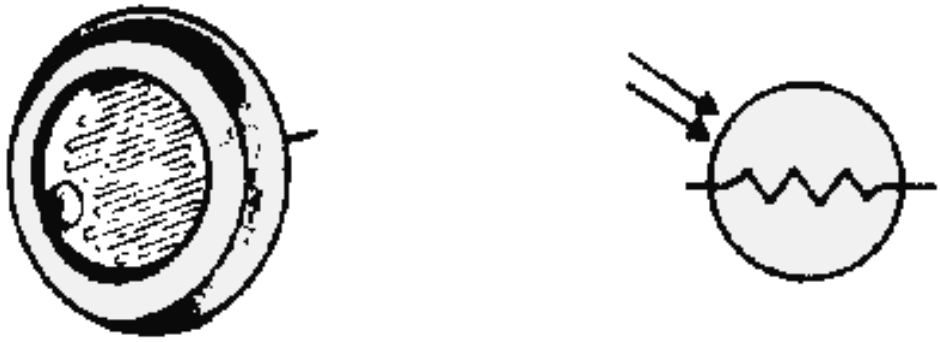

Figure 3-34.—Photocell.

The photovoltaic cell, or solar cell, is a device which converts light energy into electrical energy. An example of a solar cell and its schematic symbol are shown in figure 3-35. The symbol is similar to that of a battery. The device itself acts much like a battery when exposed to light and produces about .45 volt across its terminals, with current capacity determined by its size. As with batteries, solar cells may be connected in series or parallel to produce higher voltages and currents. The device is finding widespread application in communications satellites and solar-powered homes.

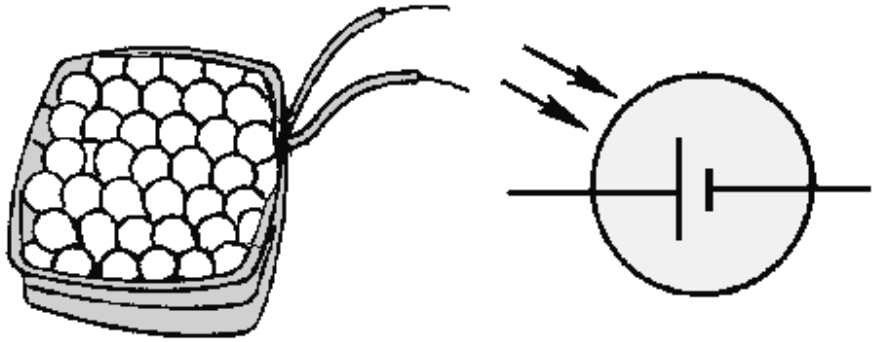

Figure 3-35.—Solar cell.

When it is necessary to block the voltage between one electronic circuit and another, and transfer the signal at the same time, an amplifier coupling capacitor is often used as shown in figure 3-36. Although this method of coupling does block dc between the circuits, voltage isolation is not complete. A newer method, making use of optoelectronic devices to achieve electrical isolation, is the optical coupler, shown in figure 3-37. The coupler is composed of an LED and a photodiode contained in a light-conducting medium. As the polarity signs in figure 3-37 show, the LED is forward biased, while the photodiode is reverse biased. When the input signal causes current through the LED to increase, the light produce by the LED increases. This increased light intensity causes current flow through the photodiode to increase. In this way, changes in input current produce proportional changes in the output, even though the two circuits are electrically isolated.

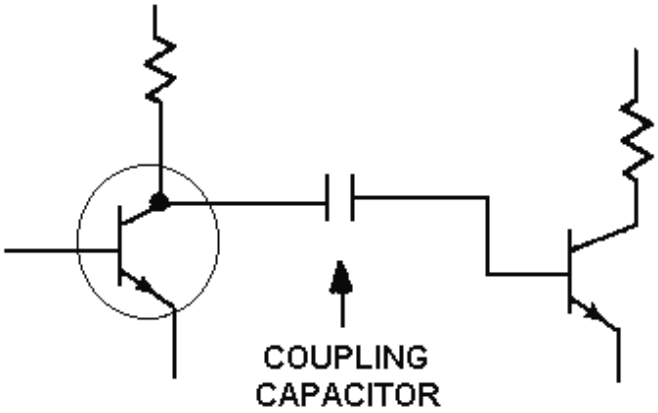

Figure 3-36.—Dc blocking with a coupling capacitor.

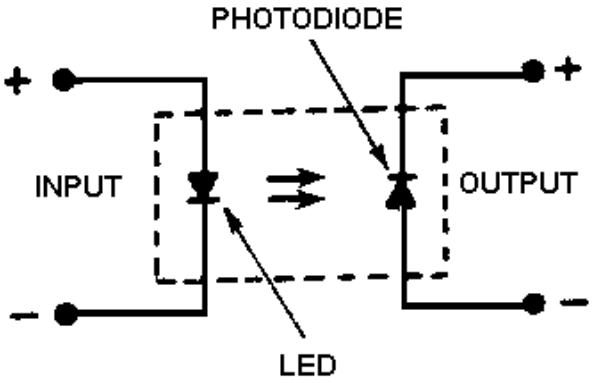

Figure 3-37.—Optical coupler.

The optical coupler is suitable for frequencies in the low megahertz range. The photodiode type shown above can handle only small currents; however, other types of couplers, combining phototransistors with the SCR, can be used where more output is required. Optical couplers are replacing transformers in low-voltage and low-current applications. Sensitive digital circuits can use the coupler to control large current and voltages with low-voltage logic levels.

Q19. What type of bias is required to cause an LED to produce light?

Q20. When compared to incandescent lamps, what is the power requirement of an LED?

Q21. In a common anode, seven-segment LED display, an individual LED will light if a negative voltage is applied to what element?

Q22. What is the resistance level of a photodiode in total darkness?

Q23. What type of bias is required for proper operation of a photodiode?

Q24. What is a typical light-to-dark resistance ratio for a photocell?

Q25. What semiconductor device produces electrical energy when exposed to light?

TRANSISTORS

Transistors are semiconductor devices with three or more terminals. The operation of normal transistors has already been discussed, but there are several transistors with special properties that should be explained. As with diodes, a discussion of all the developments in the transistor field would be impossible. The unijunction transistor (UJT) and the field effect transistor (FET) will be discussed because of their widespread application in Navy equipment. Many other special transistors have been developed and will be discussed in later *NEETS* modules.

The Unijunction Transistor (UJT)

The UNIJUNCTION TRANSISTOR (UJT), originally called a double-based diode, is a three-terminal, solid-state device that has several advantages over conventional transistors. It is very stable over a wide range of temperatures and allows a reduction of components when used in place of conventional transistors. A comparison is shown in figure 3-38. View A is a circuit using conventional transistors, and view B is the same circuit using the UJT. As you can see, the UJT circuit has fewer components. Reducing the number of components reduces the cost, size, and probability of failure.

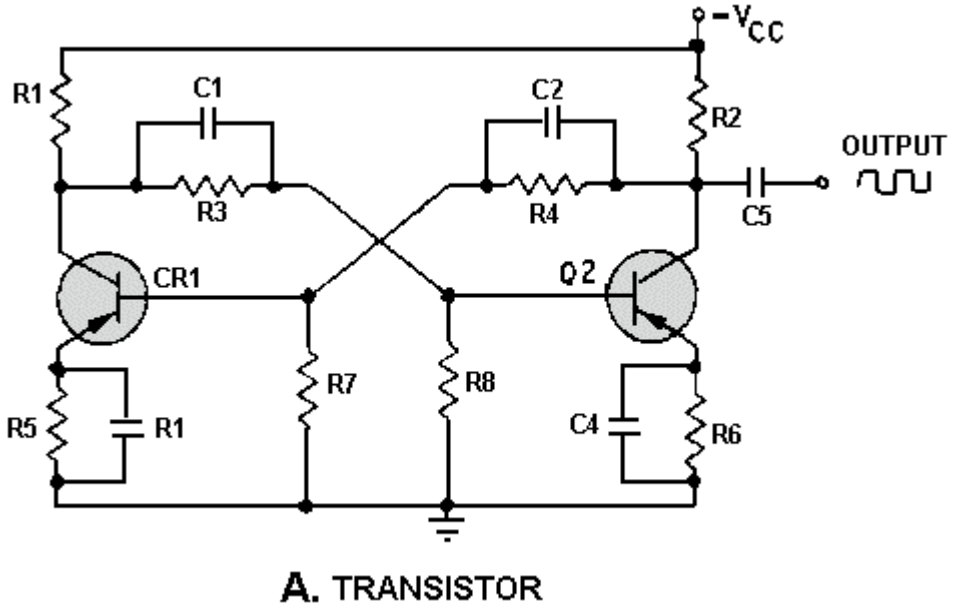

Figure 3-38A.—Comparison of conventional transistors and UJT circuits.

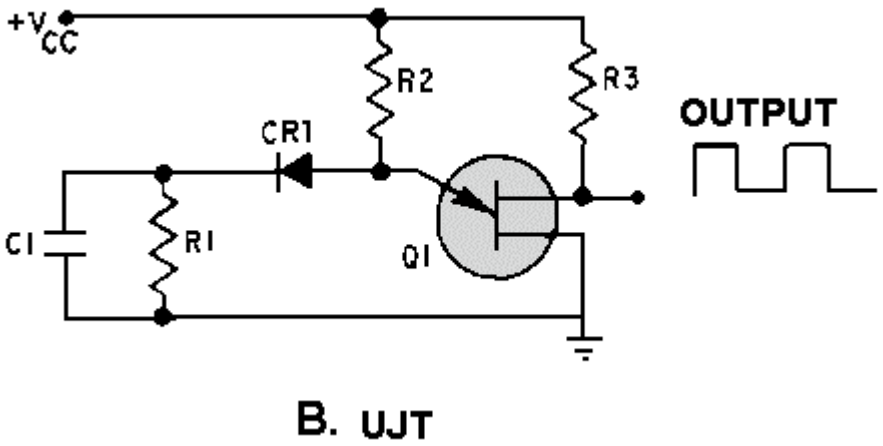

Figure 3-38B.—Comparison of conventional transistors and UJT circuits.

The physical appearance of the UJT is identical to that of the common transistor. As shown in figure 3-39, both have three leads and the same basic shape; the tab on the case indicates the emitter on both devices. The UJT, however, has a second base instead of a collector.

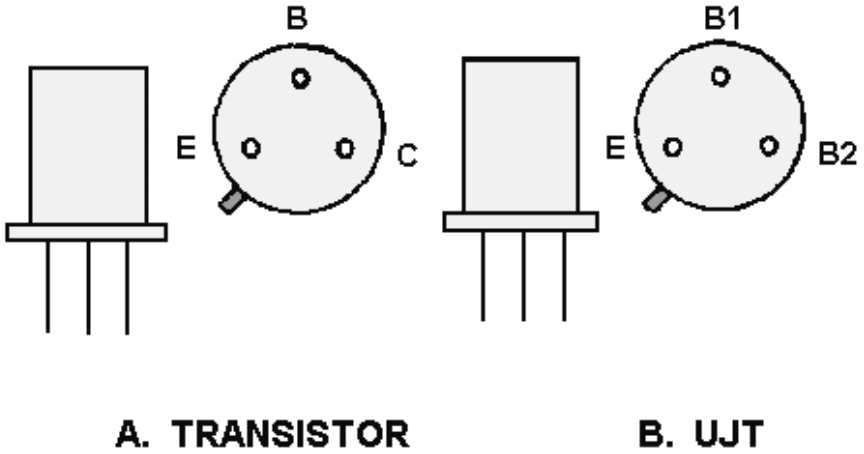

Figure 3-39.—Transistor and UJT.

As indicated in the block diagram shown in views A and B of figure 3-40, the lead differences are even more pronounced. Unlike the transistor, the UJT has only one PN junction. The area between base 1 and base 2 acts as a resistor when the UJT is properly biased. A conventional transistor needs a certain bias level between the emitter, base, and collector for proper conduction. The same principle is true for the UJT; it needs a certain bias level between the emitter and base 1 and also between base 1 and base 2 for proper conduction.

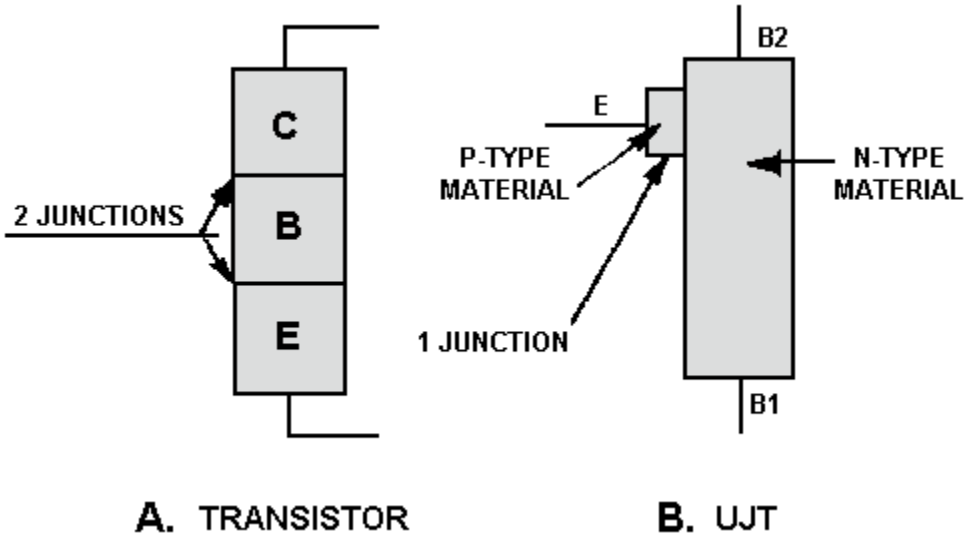

Figure 3-40.—Transistor and UJT structure.

The normal bias arrangement for the UJT is illustrated in figure 3-41, view A. A positive 10 volts is placed on base 2 and a ground on base 1. The area between base 1 and base 2 acts as a resistor. If a reading were taken between base 1 and base 2, the meter would indicate the full 10 volts as shown in view B. Theoretically, if one meter lead were connected to base 1 and the other lead to some point between base 1 and base 2, the meter would read some voltage less than 10 volts. This concept is illustrated in figure 3-42, view A. View B is an illustration of the voltage levels at different points between the two bases. The sequential rise in voltage is called a voltage gradient.

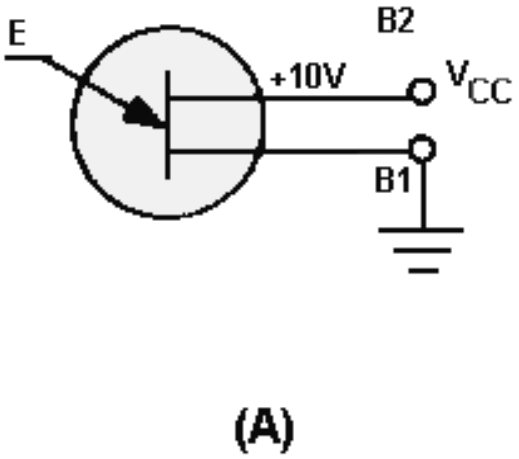

Figure 3-41A.—UJT biasing.

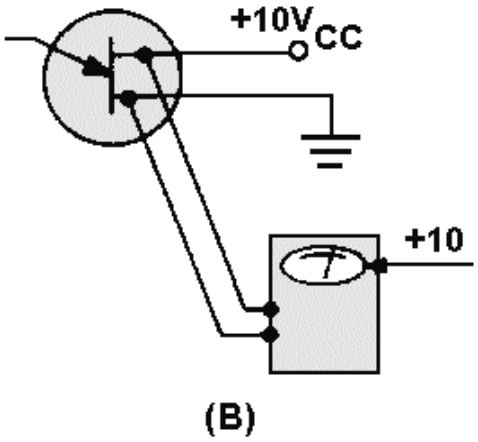

Figure 3-41B.—UJT biasing.

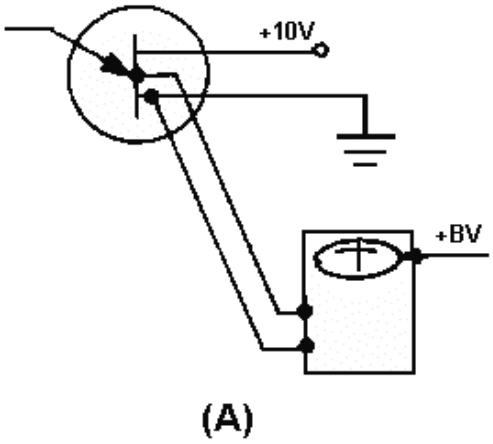

Figure 3-42A.—UJT voltage gradient.

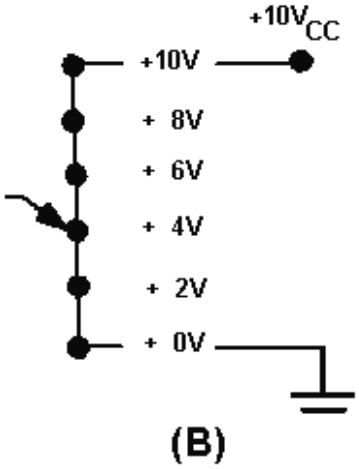

Figure 3-42B.—UJT voltage gradient.

The emitter of the UJT can be viewed as the wiper arm of a variable resistor. If the voltage level on the emitter is more positive than the voltage gradient level at the emitter-base material contact point, the UJT is forward biased. The UJT will conduct heavily (almost a short circuit) from base 1 to the emitter. The emitter is fixed in position by the manufacturer. The level of the voltage gradient therefore depends upon the amount of bias voltage, as shown in figure 3-43.

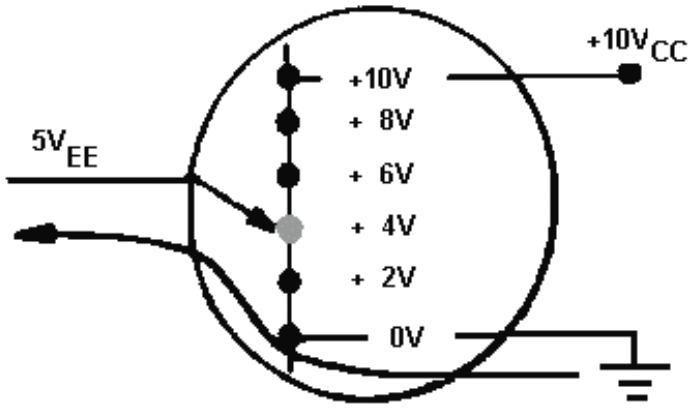

Figure 3-43.—Forward bias point on UJT voltage gradient.

If the voltage level on the emitter is less positive than the voltage gradient opposite the emitter, the UJT is reverse biased. No current will flow from base 1 to the emitter. However, a small current, called reverse current, will flow from the emitter to base 2. The reverse current is caused by the impurities used in the construction of the UJT and is in the form of minority carriers.

More than 40 distinct types of UJTs are presently in use. One of the most common applications is in switching circuits. They are also used extensively in oscillators and wave-shaping circuits.

Q26. The UJT has how many PN junctions?

Q27. The area between base 1 and base 2 in a UJT acts as what type of common circuit component?

Q28. The sequential rise in voltage between the two bases of the UJT is called what?

Q29. What is the normal current path for a UJT?

Field Effect Transistors

Although it has brought about a revolution in the design of electronic equipment, the bipolar (PNP/NPN) transistor still has one very undesirable characteristic. The low input impedance associated with its base-emitter junction causes problems in matching impedances between interstage amplifiers.

For years, scientists searched for a solution that would combine the high input impedance of the vacuum tube with the many other advantages of the transistor. The result of this research is the FIELD-EFFECT TRANSISTOR (FET). In contrast to the bipolar transistor, which uses bias current between base and emitter to control conductivity, the FET uses voltage to control an electrostatic field within the transistor. Because the FET is voltage-controlled, much like a vacuum tube, it is sometimes called the "solid-state vacuum tube."

The elements of one type of FET, the junction type (JFET), are compared with the bipolar transistor and the vacuum tube in figure 3-44. As the figure shows, the JFET is a three-element device comparable to the other two. The "gate" element of the JFET corresponds very closely in operation to the base of the transistor and the grid of the vacuum tube. The "source" and "drain" elements of the JFET correspond to the emitter and collector of the transistor and to the cathode and plate of the vacuum tube.

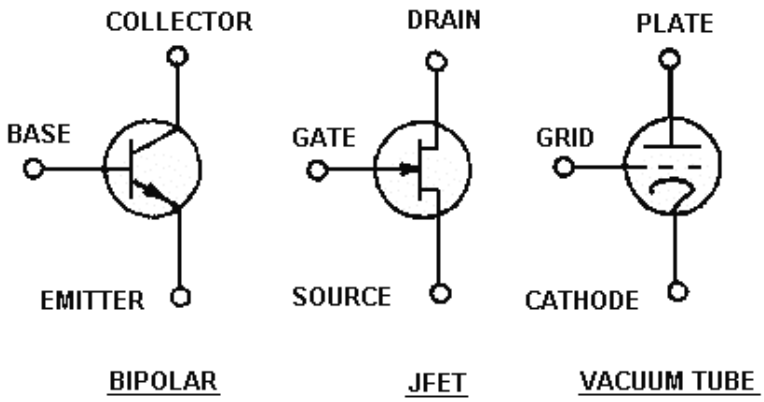

Figure 3-44.—Comparison of JFET, transistor, and vacuum tube symbols.

The construction of a JFET is shown in figure 3-45. A solid bar, made either of N-type or P-type material, forms the main body of the device. Diffused into each side of this bar are two deposits of material of the opposite type from the bar material, which form the "gate." The portion of the bar between the deposits of gate material is of a smaller cross section than the rest of the bar and forms a "channel" connecting the source and the drain. Figure 3-45 shows a bar of N-type material and a gate of P-type material. Because the material in the channel is N-type, the device is called an N-channel JFET.

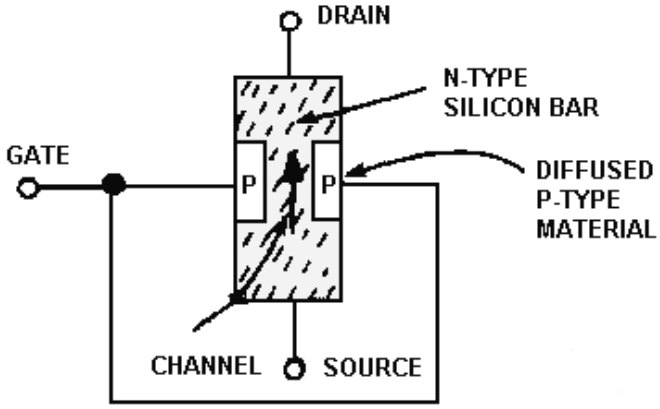

Figure 3-45.—JFET structure.

In a P-channel JFET, the channel is made of P-type material and the gate of N-type material. In figure 3-46, schematic symbols for the two types of JFET are compared with those of the NPN and PNP bipolar transistors. Like the bipolar transistor types, the two types of JFET differ only in the configuration of bias voltages required and in the direction of the arrow within the symbol. Just as it does in transistor symbols, the arrow in a JFET symbol always points towards the N-type material. Thus the symbol of the N-channel JFET shows the arrow pointing toward the drain/source channel, whereas the P-channel symbol shows the arrow pointing away from the drain/source channel toward the gate.

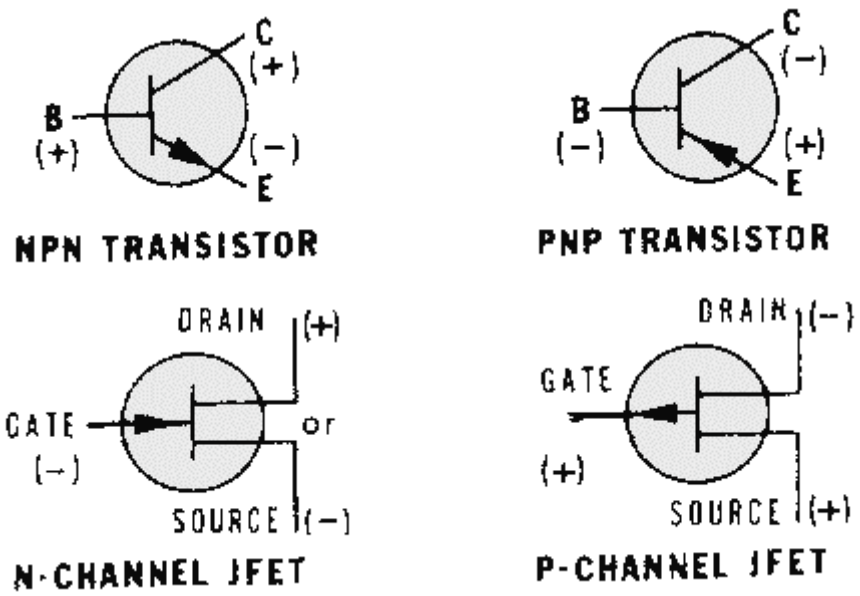

Figure 3-46.—Symbols and bias voltages for transistors and JFET.

The key to FET operation is the effective cross-sectional area of the channel, which can be controlled by variations in the voltage applied to the gate. This is demonstrated in the figures which follow.

Figure 3-47 shows how the JFET operates in a zero gate bias condition. Five volts are applied across the JFET so that current flows through the bar from source to drain, as indicated by the arrow. The gate terminal is tied to ground. This is a zero gate bias condition. In this condition, a typical bar represents a resistance of about 500 ohms. A milliammeter, connected in series with the drain lead and dc power, indicates the amount of current flow. With a drain supply (V_{DD}) of 5 volts, the milliammeter gives a drain current (I_D) reading of 10 milliamperes. The voltage and current subscript letters (V_{DD}, I_D) used for an FET correspond to the elements of the FET just as they do for the elements of transistors.

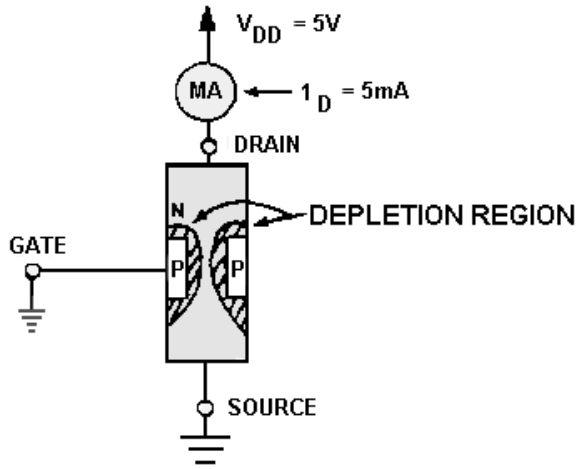

Figure 3-47.—JFET operation with zero gate bias.

In figure 3-48, a small reverse-bias voltage is applied to the gate of the JFET. A gate-source voltage (V_{GG}) of negative 1 volt applied to the P-type gate material causes the junction between the P- and N-type material to become reverse biased. Just as it did in the varactor diode, a reverse-bias condition causes a

"depletion region" to form around the PN junction of the JFET. Because this region has a reduced number of current carriers, the effect of reverse biasing is to reduce the effective cross-sectional area of the "channel." This reduction in area increases the source-to-drain resistance of the device and decreases current flow.

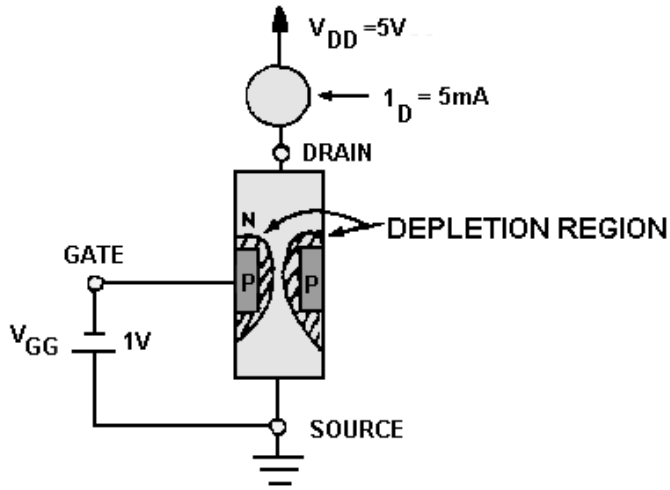

Figure 3-48.—JFET with reverse bias.

The application of a large enough negative voltage to the gate will cause the depletion region to become so large that conduction of current through the bar stops altogether. The voltage required to reduce drain current (I_D) to zero is called "pinch-off" voltage and is comparable to "cut-off" voltage in a vacuum tube. In figure 3-48, the negative 1 volt applied, although not large enough to completely stop conduction, has caused the drain current to decrease markedly (from 10 milliamperes under zero gate bias conditions to 5 milliamperes). Calculation shows that the 1-volt gate bias has also increased the resistance of the JFET (from 500 ohms to 1 kilohm). In other words, a 1-volt change in gate voltage has doubled the resistance of the device and cut current flow in half.

These measurements, however, show only that a JFET operates in a manner similar to a bipolar transistor, even though the two are constructed differently. As stated before, the main advantage of an FET is that its input impedance is significantly higher than that of a bipolar transistor. The higher input impedance of the JFET under reverse gate bias conditions can be seen by connecting a microammeter in series with the gate-source voltage (V_{GG}), as shown in figure 3-49.

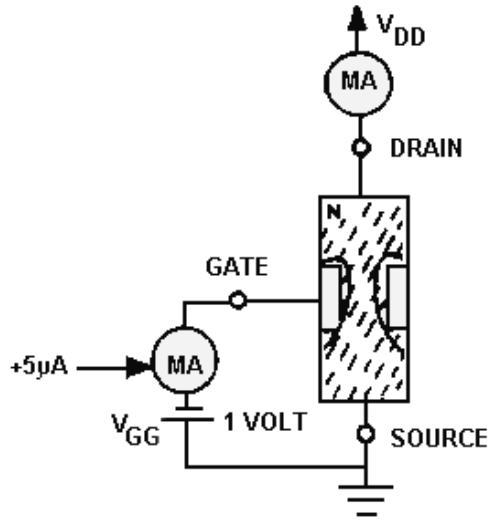

Figure 3-49.—JFET input impedance.

With a V_{GG} of 1 volt, the microammeter reads .5 microamps. Applying Ohm's law (1V ÷ .5 μA) illustrates that this very small amount of current flow results in a very high input impedance (about 2 megohms). By contrast, a bipolar transistor in similar circumstances would require higher current flow (e.g., .1 to −1 mA), resulting in a much lower input impedance (about 1000 ohms or less). The higher input impedance of the JFET is possible because of the way reverse-bias gate voltage affects the cross-sectional area of the channel.

The preceding example of JFET operation uses an N-channel JFET. However, a P-channel JFET operates on identical principles. The differences between the two types are shown in figure 3-50.

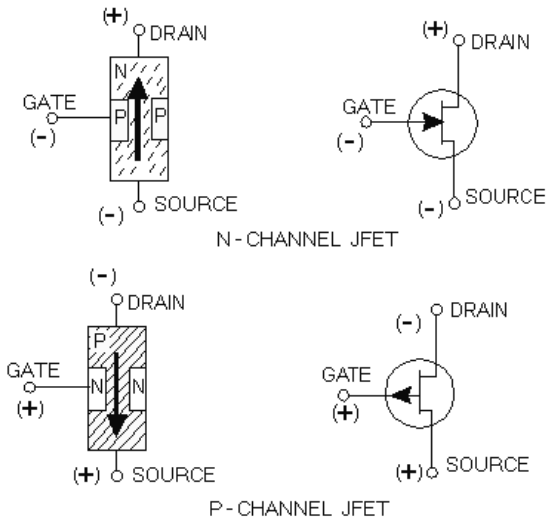

Figure 3-50.—JFET symbols and bias voltages.

Because the materials used to make the bar and the gate are reversed, source voltage potentials must also be reversed. The P-channel JFET therefore requires a positive gate voltage to be reverse biased, and current flows through it from drain to source.

Figure 3-51 shows a basic common-source amplifier circuit containing an N-channel JFET. The characteristics of this circuit include high input impedance and a high voltage gain. The function of the circuit components in this figure is very similar to those in a triode vacuum tube common-cathode amplifier circuit. C1 and C3 are the input and output coupling capacitors. R1 is the gate return resistor and functions much like the grid return resistor in a vacuum tube circuit. It prevents unwanted charge buildup on the gate by providing a discharge path for C1. R2 and C2 provide source self-bias for the JFET, which operates like cathode self-bias. R3 is the drain load resistor, which acts like the plate or collector load resistor.

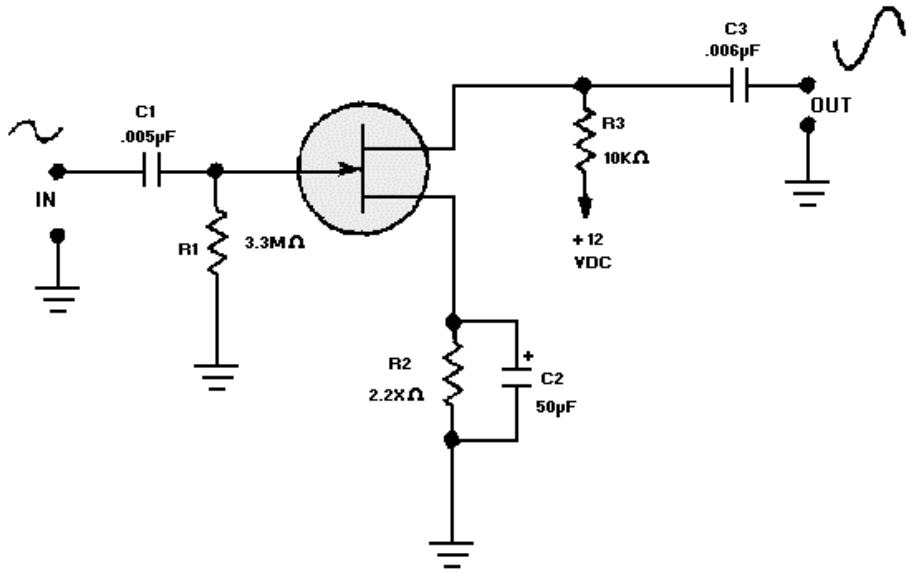

Figure 3-51.—JFET common source amplifier.

The phase shift of 180 degrees between input and output signals is the same as that of common-cathode vacuum tube circuits (and common-emitter transistor circuits). The reason for the phase shift can be seen easily by observing the operation of the N-channel JFET. On the positive alternation of the input signal, the amount of reverse bias on the P-type gate material is reduced, thus increasing the effective cross-sectional area of the channel and decreasing source-to-drain resistance. When resistance decreases, current flow through the JFET increases. This increase causes the voltage drop across R3 to increase, which in turn causes the drain voltage to decrease. On the negative alternation of the cycle, the amount of reverse bias on the gate of the JFET is increased and the action of the circuit is reversed. The result is an output signal, which is an amplified 180-degree-out-of-phase version of the input signal.

A second type of field-effect transistor has been introduced in recent years that has some advantages over the JFET. This device is the metal oxide semiconductor field effect transistor (MOSFET). The MOSFET has an even higher input impedance than the JFET (10 to 100 million megohms). Therefore, the MOSFET is even less of a load on preceding circuits. The extremely high input impedance, combined with a high gain factor, makes the MOSFET a highly efficient input device for RF/IF amplifiers and mixers and for many types of test equipment.

The MOSFET is normally constructed so that it operates in one of two basic modes: the depletion mode or the enhancement mode. The depletion mode MOSFET has a heavily doped channel and uses reverse bias on the gate to cause a depletion of current carriers in the channel. The JFET also operates in this manner. The enhancement mode MOSFET has a lightly doped channel and uses forward bias to

enhance the current carriers in the channel. A MOSFET can be constructed that will operate in either mode depending upon what type of bias is applied, thus allowing a greater range of input signals.

In addition to the two basic modes of operation, the MOSFET, like the JFET, is of either the P-channel type or the N-channel type. Each type has four elements: gate, source, drain, and substrate. The schematic symbols for the four basic variations of the MOSFET are shown in views A, B, C, and D of figure 3-52.

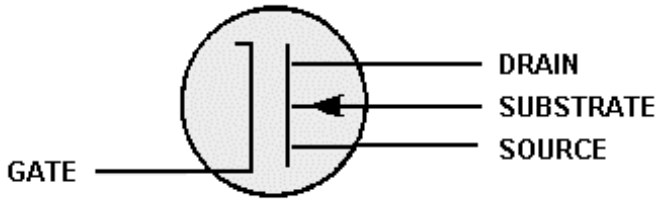

A. N-CHANNEL, DEPLETION, MOSFET

Figure 3-52A.—MOSFET symbols.

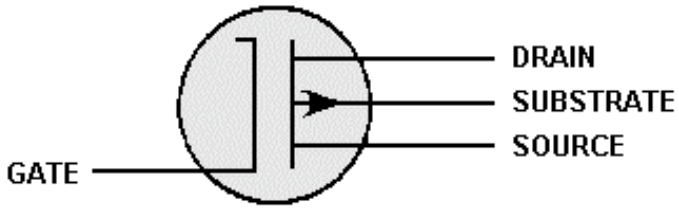

B. P-CHANNEL, DEPLETION, MOSFET

Figure 3-52B.—MOSFET symbols.

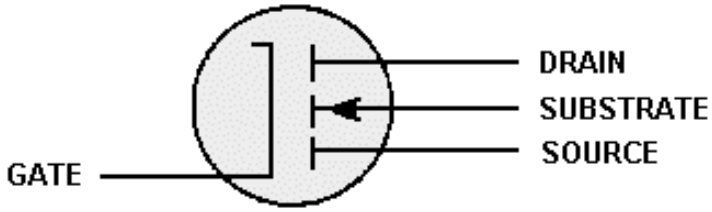

C. N-CHANNEL, ENHANCEMENT, MOSFET

Figure 3-52C.—MOSFET symbols.

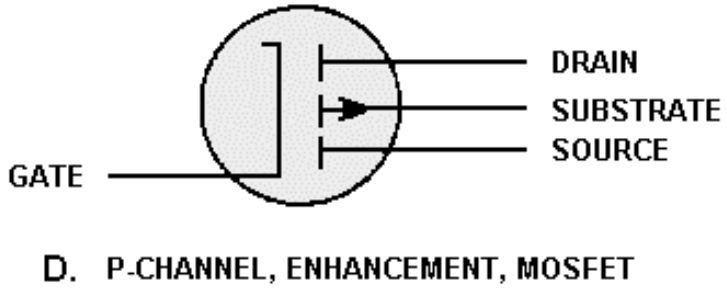

Figure 3-52D.—MOSFET symbols.

The construction of an N-channel MOSFET is shown in figure 3-53. Heavily doped N-type regions (indicated by the N+) are diffused into a P-type substrate or base. A channel of regular N-type material is diffused between the heavily doped N-type regions. A metal oxide insulating layer is then formed over the channel, and a metal gate layer is deposited over the insulating layer. There is no electrical connection between the gate and the rest of the device. This construction method results in the extremely high input impedance of the MOSFET. Another common name for the device, derived from the construction method, is the insulated gate field effect transistor (IGFET).

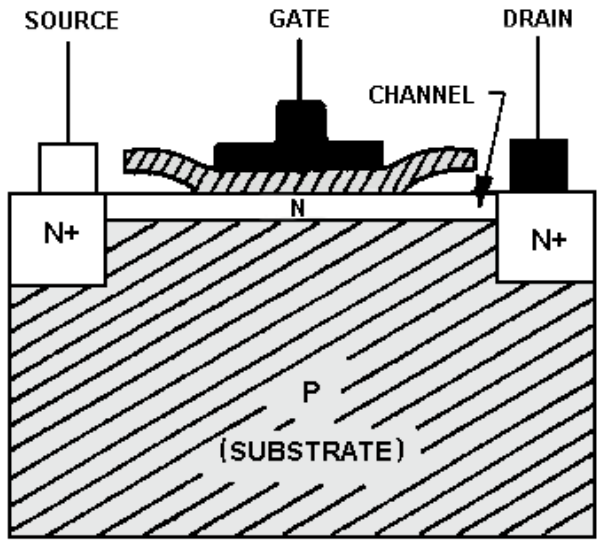

Figure 3-53.—MOSFET structure.

The operation of the MOSFET, or IGFET, is basically the same as the operation of the JFET. The current flow between the source and drain can be controlled by using either of two methods or by using a combination of the two methods. In one method the drain voltage controls the current when the gate potential is at zero volts. A voltage is applied to the gate in the second method. An electric field is formed by the gate voltage that affects the current flow in the channel by either depleting or enhancing the number of current carriers available. As previously stated, a reverse bias applied to the gate depletes the carriers, and a forward bias enhances the carriers. The polarity of the voltages required to forward or reverse bias a MOSFET depends upon whether it is of the P-channel type or the N-channel type. The effects of reverse-bias voltage on a MOSFET designed to operate in the depletion mode are illustrated in

views A, B, and C of figure 3-54. The amount of reverse bias applied has a direct effect on the width of the current channel and, thus, the amount of drain current (I_D).

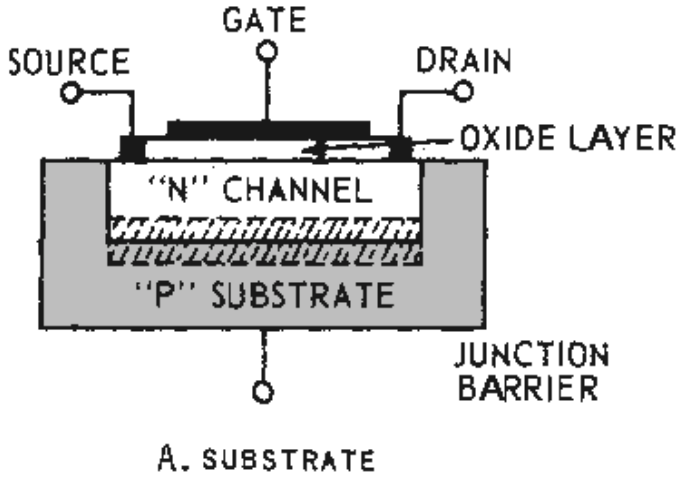

Figure 3-54A.—Effects of bias on N-channel depletion MOSFET.

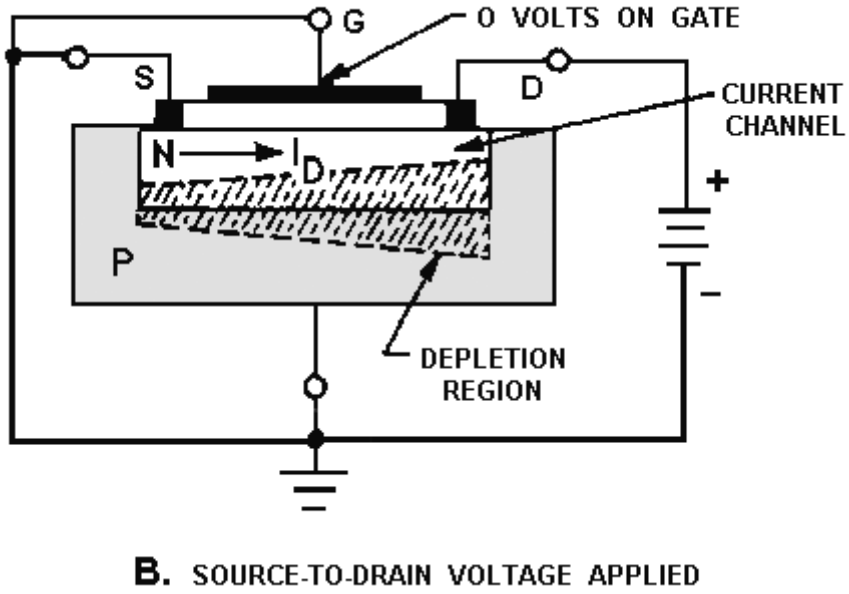

Figure 3-54B.—Effects of bias on N-channel depletion MOSFET.

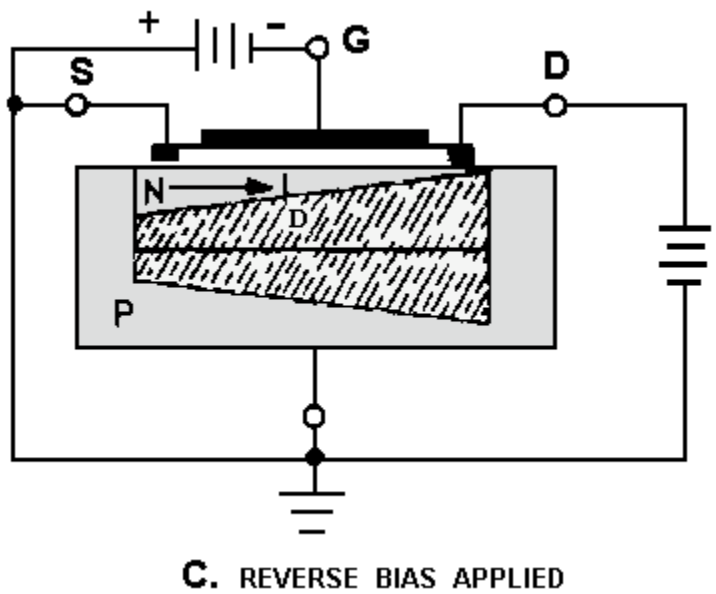

Figure 3-54C.—Effects of bias on N-channel depletion MOSFET.

Figure 3-55 (view A, view B, and view C) illustrates the effect of forward bias on an enhancement mode N-channel MOSFET. In this case, a positive voltage applied to the gate increases the width of the current channel and the amount of drain current (I_D).

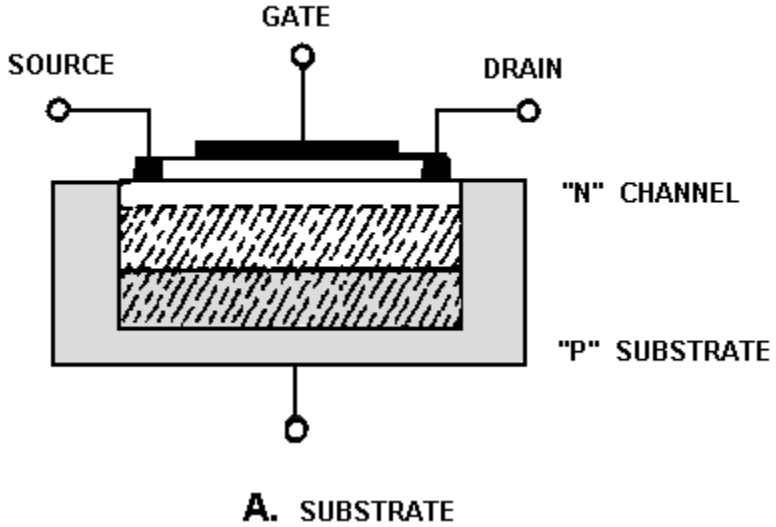

Figure 3-55A.—Effects of bias on N-channel enhancement MOSFET.

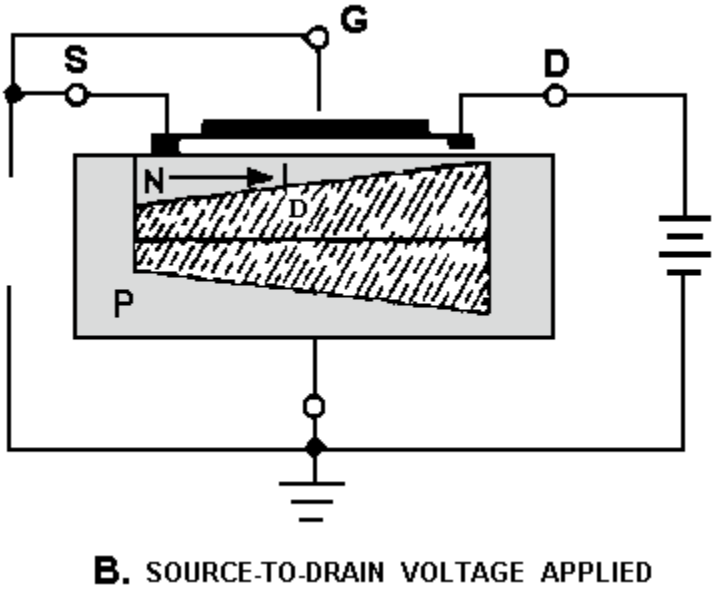

Figure 3-55B.—Effects of bias on N-channel enhancement MOSFET.

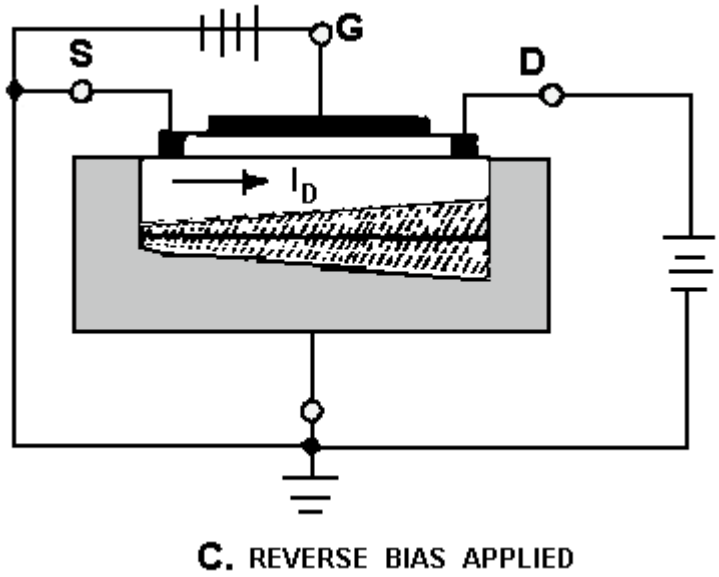

Figure 3-55C.—Effects of bias on N-channel enhancement MOSFET.

Another type of MOSFET is the induced-channel type MOSFET. Unlike the MOSFETs discussed so far, the induced-channel type has no actual channel between the source and the drain. The induced channel MOSFET is constructed by making the channel of the same type material as the substrate, or the opposite of the source and the drain material. As shown in figure 3-56, the source and the drain are of P-type material, and the channel and the substrate are of N-type material.

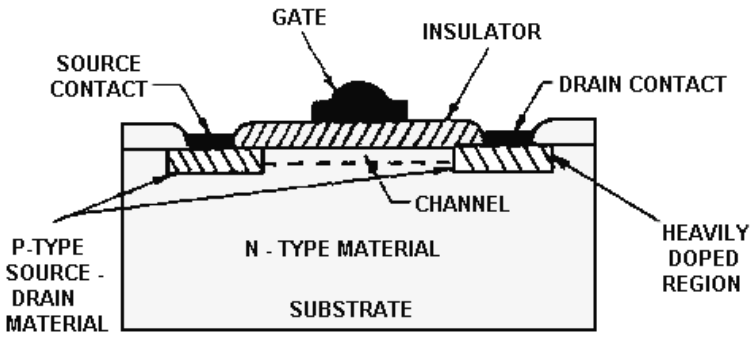

Figure 3-56.—Induced channel MOSFET construction.

The induced-channel MOSFET is caused to conduct from source to drain by the electric field that is created when a voltage is applied to the gate. For example, assume that a negative voltage is applied to the MOSFET in figure 3-56. The effect of the negative voltage modifies the conditions in the substrate material. As the gate builds a negative charge, free electrons are repelled, forming a depletion region. Once a certain level of depletion has occurred (determined by the composition of the substrate material), any additional gate bias attracts positive holes to the surface of the substrate. When enough holes have accumulated at the surface channel area, the channel changes from an N-type material to a P-type material, since it now has more positive carriers than negative carriers. At this point the channel is considered to be to inverted, and the two P-type regions at the source and the drain are now connected by a P-type inversion layer or channel. As with the MOSFET, the gate signal determines the amount of current flow through the channel as long as the source and drain voltages remain constant. When the gate voltage is at zero, essentially no current flows since a gate voltage is required to form a channel.

The MOSFETs discussed up to this point have been single-gate MOSFETs. Another type of MOSFET, the dual-gate type, is shown in figure 3-57. As the figure shows, the gates in a dual-gate MOSFET can be compared to the grids in a multi-grid vacuum tube. Because the substrate has been connected directly to the source terminal, the dual-gate MOSFET still has only four leads: one each for source and drain, and two for the gates. Either gate can control conduction independently, making this type of MOSFET a truly versatile device.

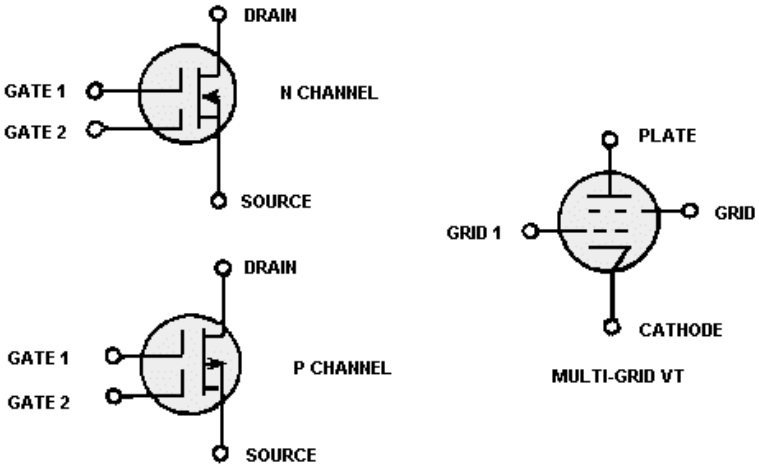

Figure 3-57.—Dual-gate MOSFET.

One problem with both the single- and dual-gate MOSFETs is that the oxide layer between gate and channel can be destroyed very easily by ordinary static electricity. Replacement MOSFETs come packaged with their leads shorted together by a special wire loop or spring to avoid accidental damage. The rule to remember with these shorting springs is that they must not be removed until after the MOSFET has been soldered or plugged into a circuit. One such spring is shown in figure 3-58.

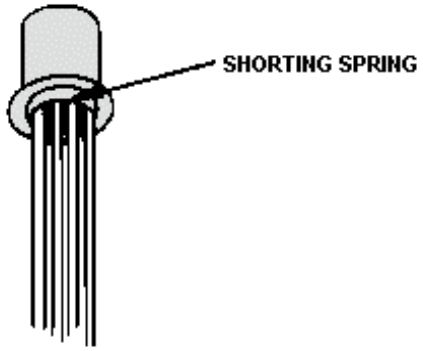

Figure 3-58.—MOSFET shorting spring.

Q30. What is one of the primary advantages of the FET when compared to the bipolar transistor?

Q31. The FET and the vacuum tube have what in common?

Q32. The base of a transistor serves a purpose similar to what element of the FET?

Q33. What are the two types of JFET?

Q34. The source and drain of an N-channel JFET are made of what type of material?

Q35. What is the key to FET operation?

Q36. What is the normal current path in an N-channel JFET?

Q37. Applying a reverse bias to the gate of an FET has what effect?

Q38. The input and output signals of a JFET amplifier have what phase relationship?

Q39. When compared to the JFET, what is the input impedance of the MOSFET?

Q40. What are the four elements of the MOSFET?

Q41. The substrate of an N-channel MOSFET is made of what material?

Q42. In a MOSFET, which element is insulated from the channel material?

Q43. What type of MOSFET can be independently controlled by two separate signals?

Q44. What is the purpose of the spring or wire around the leads of a new MOSFET?

SUMMARY

This chapter introduced you to a representative selection of solid-state devices that have special properties. The basic operating principles of the devices discussed in this chapter are summarized in the following paragraphs for you to use as a review and a future reference.

The **ZENER DIODE** is a PN junction that is designed to operate in the reverse-bias breakdown mode. When the applied voltage reaches the breakdown point, the Zener diode, for all practical purposes, becomes a short circuit. The reverse bias and breakdown mode of operation cause the Zener diode to conduct with (in the direction of) the arrow in the symbol as shown.

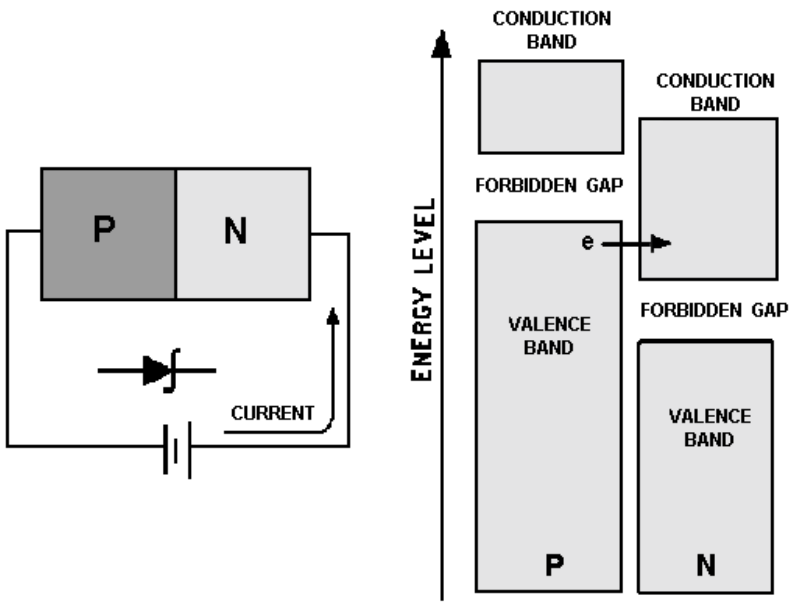

Two theories are used to explain the breakdown action of Zener diodes. The **ZENER EFFECT** explains the breakdown of diodes below 5 volts. The heavy doping used in these diodes allows the valence band of one material to overlap the energy level of the conduction band of the other material. This situation allows electrons to tunnel across the PN junction at the point where the two energy bands overlap. Zener diodes that operate above 5 volts are explained by the AVALANCHE EFFECT in which free electrons colliding with bound electrons cause an ever-increasing number of free current carriers in a multiplying action. The Zener diode is used primarily as a voltage regulator in electronic circuits.

The **TUNNEL DIODE** is a heavily doped PN junction that exhibits negative resistance over part of its range of operation, as can be seen in the curve in the illustration. The heavy doping causes the tunnel diode to have a very narrow depletion region and also causes the valence band of one of the semiconductor materials to overlap the energy level of the conduction band of the other semiconductor material. At the energy overlap point, electrons can cross from the valence band of one material to the conduction band of the other material without acquiring any additional energy. This action is called tunneling. Tunnel diodes are used as amplifiers, oscillators, and high-speed switching devices.

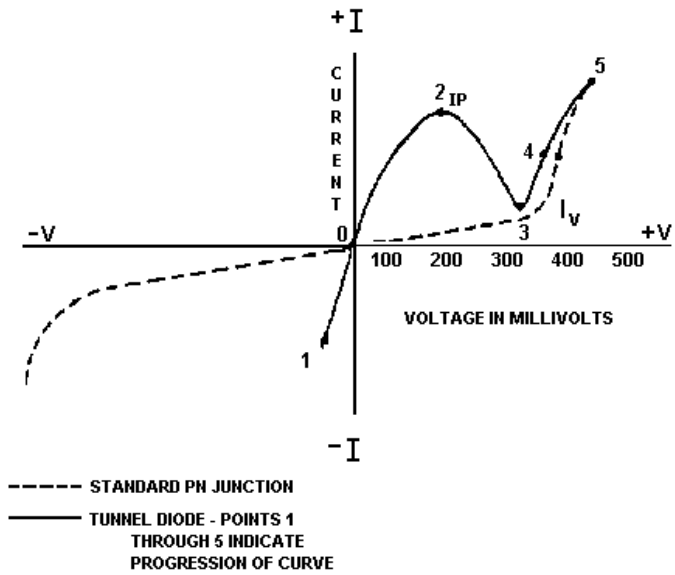

The **VARACTOR** is a diode that exhibits the characteristics of a variable capacitor. The depletion region at the PN junction acts as the dielectric of a capacitor and is caused to expand and contract by the voltage applied to the diode. This action increases and decreases the capacitance. The schematic symbol for the varactor is shown below. Varactors are used in tuning circuits and can be used as high-frequency amplifiers.

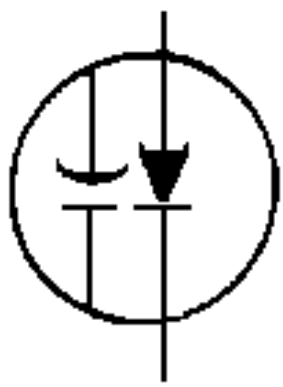

The **SILICON CONTROLLED RECTIFIER (SCR)** is a four-element, solid-state device that combines characteristics of both diodes and transistors. The symbol for the SCR is shown below. A signal must be applied to the gate to cause the SCR to conduct. When the proper gate signal is applied, the SCR conducts or "fires" until the bias potential across the device drops below the minimum required to sustain current flow. Removal of the gate signal does not shut off the SCR. In fact, the gate signal is often a very narrow voltage pulse or trigger. The SCR is ideal for use in situations where a small, low-power gate can be used to turn on larger currents, such as those found in rectifier and switching circuits. SCRs are used extensively in power supply circuits as rectifiers.

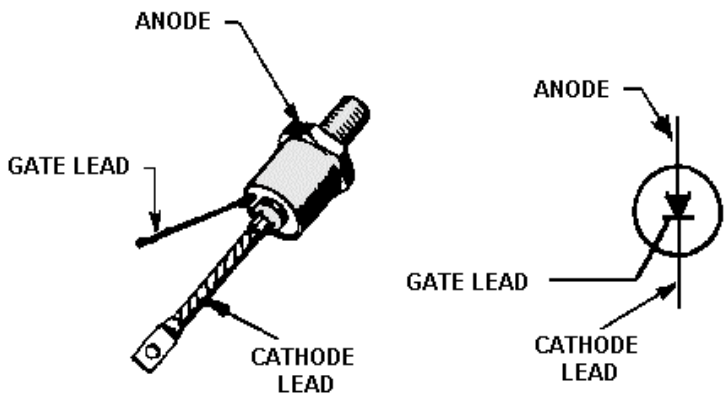

OPTOELECTRONIC DEVICES are of two basic types: light producers or light users. The LED is the most widely used light-producing device. When the LED is forward biased it emits energy in the form of light. LEDs are used in several configurations as digital equipment readout displays. The PHOTODIODE, the PHOTOTRANSISTOR, and the PHOTOCELL are all devices that use light to modify conduction through them. The SOLAR CELL uses light to produce voltage.

The **UNIJUNCTION TRANSISTOR (UJT)** is a three-terminal, solid-state device with only one PN junction. The block diagram below shows the difference in construction between normal transistors and the UJT. The area between base 1 and base 2 of the UJT acts as a variable resister. The emitter of the UJT acts as the wiper arm. The sequential rise in voltage between the bases is called a voltage gradient. The UJT conducts when the emitter is more positive than the voltage gradient at the emitter/base contact point. There are many variations of the UJT which are used in switching circuits, oscillators, and wave-shaping circuits.

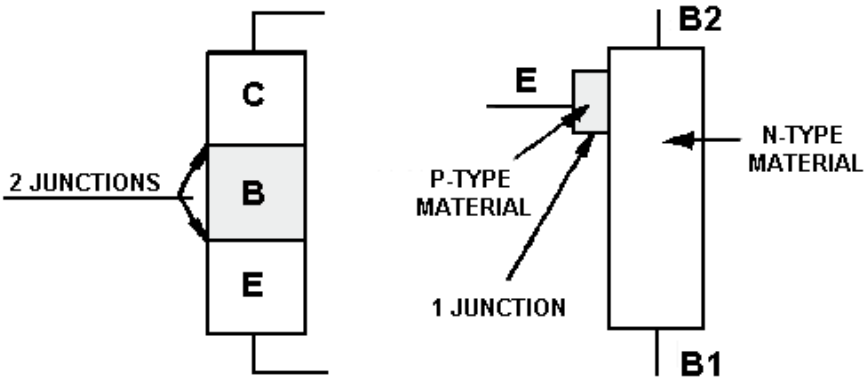

The FIELD-EFFECT TRANSISTOR combines the high input impedance of the vacuum tube with all the other advantages of the transistor. The elements of the FET are the gate, source, and drain, which are comparable to the base, emitter, and collector of a standard transistor. The JFET or "junction FET" is made of a solid bar of either P- or N-semiconductor material, and the gate is made of the opposite type material, as illustrated below. The FET is called P-channel or N-channel depending upon the type of material used to make the bar between the source and drain. Voltage applied to the gate controls the width of the channel and consequently controls the current flow from the source to the drain. The JFET is normally operated with reverse bias that controls the channel width by increasing or decreasing the depletion region.

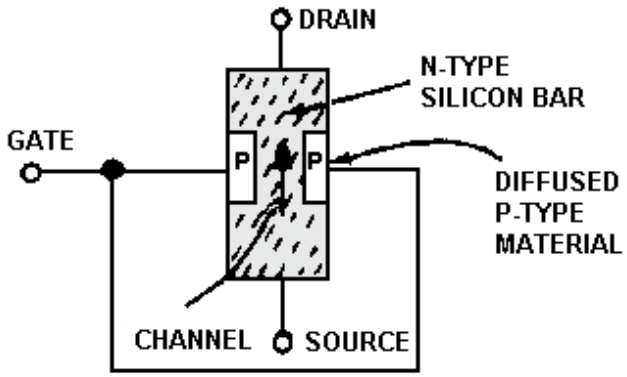

The **MOSFET** is an FET that has even higher input impedances than the JFET because the gate of the MOSFET is completely insulated from the rest of the device. The MOSFET operates in either the depletion mode or the forward-bias enhancement mode and can be either N-channel or P-channel. The induced-channel and the dual-gate MOSFETs are variations of the basic MOSFET.

ANSWERS TO QUESTIONS Q1. THROUGH Q44.

A1. The minority carriers.

A2. Zener effect and avalanche effect.

A3. Zener effect.

A4. The doping level of an avalanche effect diode is lower.

A5. An external current-limiting resistor.

A6. Because Zener diodes are operated in the reverse bias mode.

A7. The amount of doping.

A8. Negative resistance.

A9. The tunnel diode has a very narrow depletion region.

A10. Minimum.

A11. Variable capacitance.

A12. The depletion region decreases.

A13. Capacitance decreases.

A14. The SCR is primarily used for switching power on or off.

A15. A gate signal.

A16. The forward bias must be reduced below the minimum conduction level.

A17. SCR.

A18. During both alternations.

A19. Forward bias.

A20. Very low.

A21. The cathode.

A22. Very high.

A23. Reverse bias.

A24. 1:1000.

A25. Photovoltaic cell.

A26. One.

A27. Variable resistor.

A28. A voltage gradient.

A29. From base 1 to the emitter.

A30. High input impedance.

A31. Voltage controls conduction.

A32. Gate.

A33. N-channel and P-channel.

A34. N-type material.

A35. Effective cross-sectional area of the channel.

A36. From source to drain.

A37. Source-to-drain resistance increases.

A38. They are 180 degrees out of phase.

A39. The MOSFET has a higher input impedance.

A40. Gate, source, drain, and substrate.

A41. P-type material.

A42. The gate terminal.

A43. The dual-gate MOSFET.

A44. To prevent damage from static electricity.

CHAPTER 4

SOLID-STATE POWER SUPPLIES

LEARNING OBJECTIVES

Upon completion of this chapter you will be able to:

1. Identify the various sections of a power supply.
2. State the purpose of each section of a power supply.
3. Describe the operation of the power supply from both a whole unit standpoint and from a subunit standpoint.
4. Describe the purpose of the various types of rectifier circuits used in power supplies.
5. Describe the purpose of the various types of filter circuits used in power supplies.
6. Describe the operation of the various voltage and current regulators in a power supply.
7. Describe the operation of the various types of voltage multipliers.
8. Trace the flow of ac and dc in a power supply, from the ac input to the dc output on a schematic diagram.
9. Identify faulty components through visual checks.
10. Identify problems within specific areas of a power supply by using a logical isolation method of troubleshooting.
11. Apply safety precautions when working with electronic power supplies.

In today's Navy all electronic equipment, both ashore and on board ship, requires a power supply. The discovery of the silicon diode and other solid-state components made possible the reduction in size and the increase in reliability of electronic equipment. This is especially important on board ship where space and accessibility to spare parts are a major concern.

In this chapter, you will read about the individual sections of the power supply, their components, and the purpose of each within the power supply.

THE BASIC POWER SUPPLY

View A of figure 4-1 shows the block diagram of a basic power supply. Most power supplies are made up of four basic sections: a TRANSFORMER, a RECTIFIER, a FILTER, and a REGULATOR.

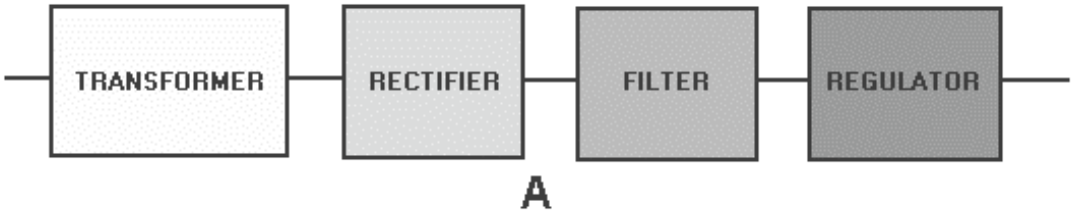

Figure 4-1A.—Block diagram of a basic power supply.

As illustrated in view B of figure 4-1, the first section is the TRANSFORMER. The transformer steps up or steps down the input line voltage and isolates the power supply from the power line. The RECTIFIER section converts the alternating current input signal to a pulsating direct current. However, as you proceed in this chapter you will learn that pulsating dc is not desirable. For this reason a FILTER section is used to convert pulsating dc to a purer, more desirable form of dc voltage.

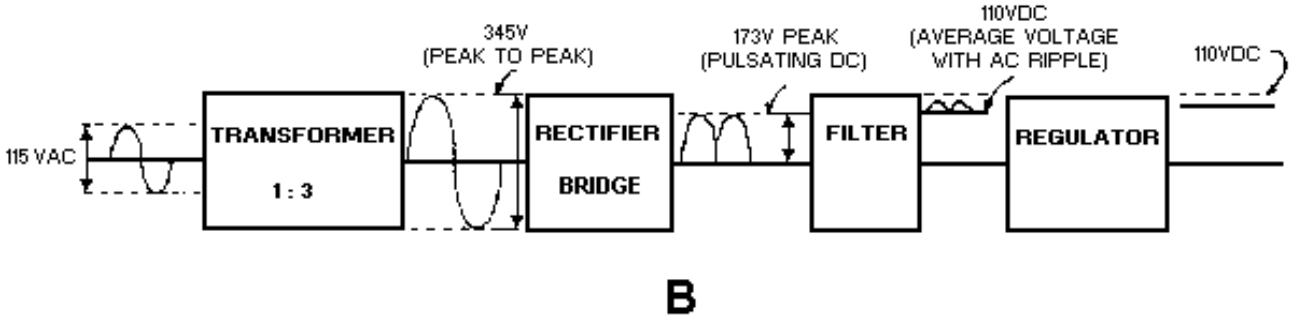

Figure 4-1B.—Block diagram of a basic power supply.

The final section, the REGULATOR, does just what the name implies. It maintains the output of the power supply at a constant level in spite of large changes in load current or input line voltages.

Now that you know what each section does, let's trace an ac signal through the power supply. At this point you need to see how this signal is altered within each section of the power supply. Later on in the chapter you will see how these changes take place. In view B of figure 4-1, an input signal of 115 volts ac is applied to the primary of the transformer. The transformer is a step-up transformer with a turns ratio of 1:3. You can calculate the output for this transformer by multiplying the input voltage by the ratio of turns in the primary to the ratio of turns in the secondary; therefore, 115 volts ac $\times$ 3 = 345 volts ac (peak-to-peak) at the output. Because each diode in the rectifier section conducts for 180 degrees of the 360-degree input, the output of the rectifier will be one-half, or approximately 173 volts of pulsating dc. The filter section, a network of resistors, capacitors, or inductors, controls the rise and fall time of the varying signal; consequently, the signal remains at a more constant dc level. You will see the filter process more clearly in the discussion of the actual filter circuits. The output of the filter is a signal of 110 volts dc, with ac ripple riding on the dc. The reason for the lower voltage (average voltage) will be explained later in this chapter. The regulator maintains its output at a constant 110-volt dc level, which is used by the electronic equipment (more commonly called the load).

Q1. What are the four basic sections of a power supply?

Q2. What is the purpose of the rectifier section?

Q3. What is the purpose of the filter section?

Q4. What is the purpose of the regulator section?

THE POWER TRANSFORMER

In some cases a power supply may not use a transformer; therefore, the power supply would be connected directly to the source line voltage. This type of connection is used primarily because it is economical. However, unless the power supply is completely insulated, it presents a dangerous shock hazard to anyone who comes in contact with it. When a transformer is not being used, the return side of the ac line is connected to the metal chassis. To remove this potential shock hazard and to have the option of stepping up or stepping down the input voltage to the rectifier, a transformer must be used.

View A of figure 4-2 shows the schematic diagram for a STEP-UP transformer; view B shows a STEP-DOWN transformer; and, view C shows a STEP-UP, CENTER-TAPPED transformer. The step-up and step-down transformers were discussed in earlier *NEETS* modules, so only the center-tapped transformer will be mentioned in this chapter. The primary purpose of the center-tapped transformer is to provide two equal voltages to the conventional full-wave rectifier.

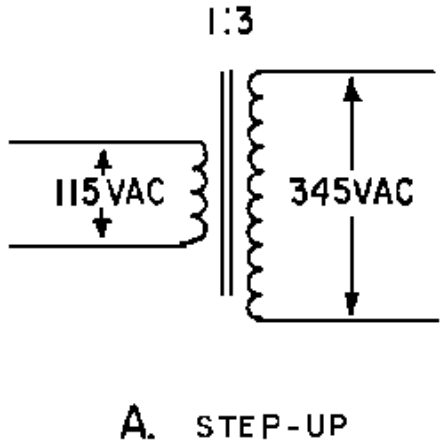

Figure 4-2A.—Common types of transformers. STEP-UP

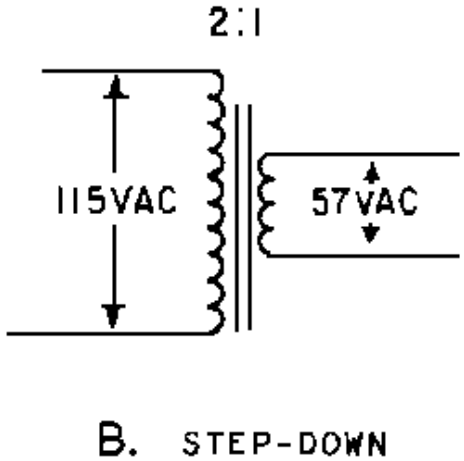

Figure 4-2B.—Common types of transformers. STEP-DOWN

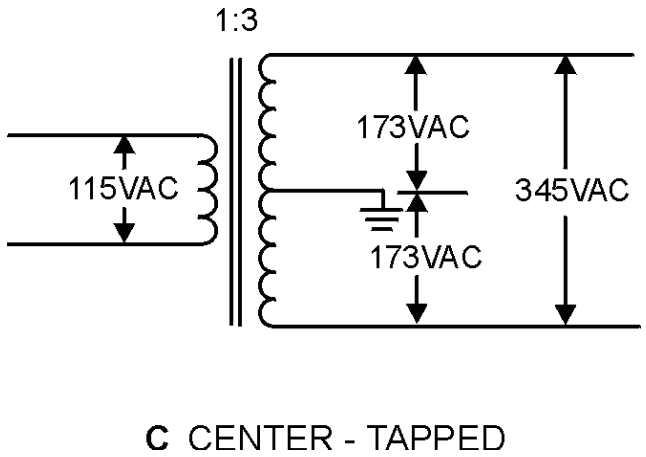

Figure 4-2C.—Common types of transformers. CENTER-TAPPED

THE RECTIFIER

From previous discussions, you should know that rectification is the conversion of an alternating current to a pulsating direct current. Now let's see how the process of RECTIFICATION occurs in both a half-wave and a full-wave rectifier.

The Half-Wave Rectifier

Since a silicon diode will pass current in only one direction, it is ideally suited for converting alternating current (ac) to direct current (dc). When ac voltage is applied to a diode, the diode conducts ONLY ON THE POSITIVE ALTERNATION OF VOLTAGE; that is, when the anode of the diode is positive with respect to the cathode. This simplest type of rectifier is the half-wave rectifier. As shown in view A of figure 4-3, the half-wave rectifier uses only one diode. During the positive alternation of input voltage, the sine wave applied to the diode makes the anode positive with respect to the cathode. The diode then conducts, and current (I) flows from the negative supply lead (the secondary of the transformer), through the milliammeter, through the diode, and to the positive supply lead. As indicated by the shaded area of the output waveform in view B, this current exists during the entire period of time that the anode is positive with respect to the cathode (in other words, for the first 180 degrees of the input sine wave).

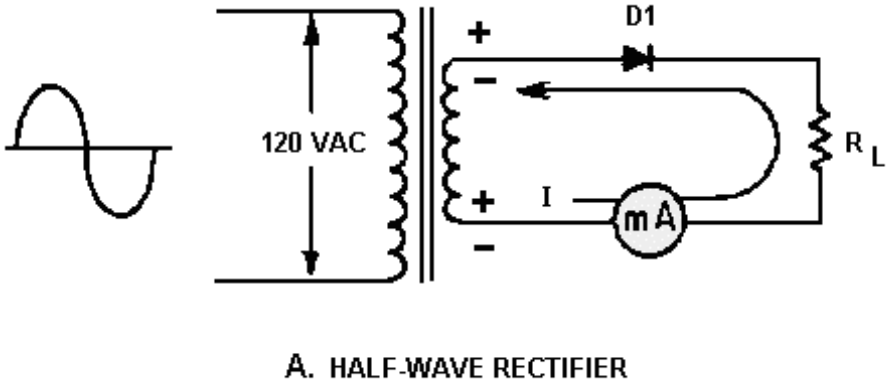

Figure 4-3A.—Simple half-wave rectifier. HALF-WAVE RECTIFIER

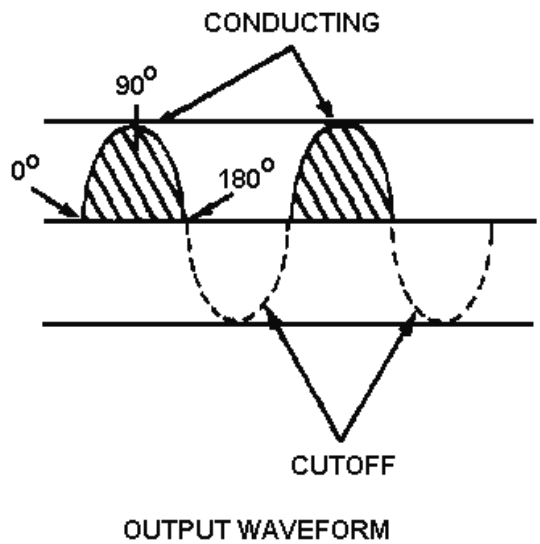

Figure 4-3B.—Simple half-wave rectifier. OUTPUT WAVEFORM

During the negative alternation of input voltage (dotted polarity signs), the anode is driven negative and the diode cannot conduct. When conditions such as these exist, the diode is in cutoff and remains in cutoff for 180 degrees, during which time no current flows in the circuit. The circuit current therefore has the appearance of a series of positive pulses, as illustrated by the shaded areas on the waveform in view B. Notice that although the current is in the form of pulses, the current always flows in the same direction. Current that flows in pulses in the same direction is called PULSATING DC. The diode has thus RECTIFIED the ac input voltage.

Rms, Peak, and Average Values

View A of figure 4-4 is a comparison of the rms, peak, and average values of the types of waveforms associated with the half-wave rectifier. Ac voltages are normally specified in terms of their rms values. Thus, when a 115-volt ac power source is mentioned in this chapter, it is specifying the rms value of 115 volts ac. In terms of peak values,

$E_{rms} = E_{peak} \times .707$

The peak value is always higher than the rms value. In fact,

$E_{peak} = E_{rms} \times 1.414$

therefore, if the rms value is 115 volts ac, then the peak value must be:

$E_{peak} = E_{rms} \times 1.414$

$E_{peak} = 115 \text{ volts ac} \times 1.414$

$E_{peak} = 162.6 \text{ volts}$

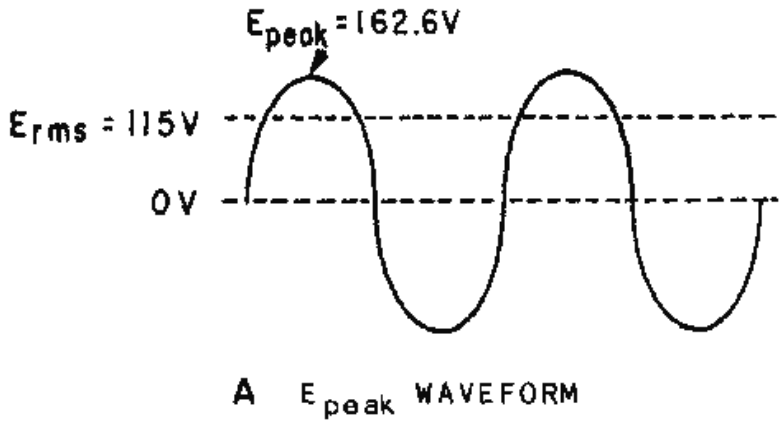

Figure 4-4A.—Comparison of E_{peak} to E_{avg} in a half-wave rectifier. E_{peak} WAVEFORM.

The average value of a sine wave is 0 volts. View B of figure 4-4 shows how the average voltage changes when the negative portion of the sine wave is clipped off. Since the wave form swings positive but never negative (past the "zero-volt" reference line), the average voltage (E_{avg}) is determined by the equation:

Where: $E_{avg} = E_{peak} \times .318$

Thus: $E_{avg} = 162.6 \times .318$

$E_{avg} = 51.7$ volts

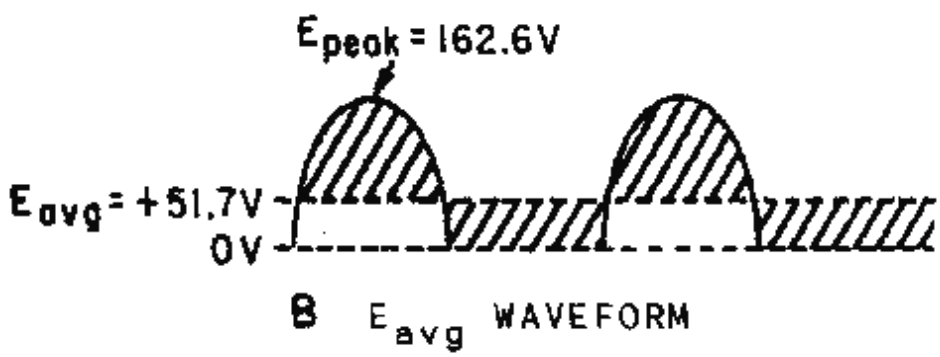

Figure 4-4B.—Comparison of E_{peak} to E_{avg} in a half-wave rectifier. E_{peak} WAVEFORM

Ripple Frequency

The half-wave rectifier gets its name from the fact that it conducts during only half the input cycle. Its output is a series of pulses with a frequency that is the same as the input frequency. Thus when operated from a 60-hertz line, the frequency of the pulses is 60 hertz. This is called RIPPLE FREQUENCY.

Q5. What is the name of the simplest type of rectifier which uses one diode?

Q6. If the output of a half-wave rectifier is 50-volts peak, what is the average voltage?

Q7. In addition to stepping up or stepping down the input line voltage, what additional purpose does the transformer serve?

The Conventional Full-Wave Rectifier

A full-wave rectifier is a device that has two or more diodes arranged so that load current flows in the same direction during each half cycle of the ac supply.

A diagram of a simple full-wave rectifier is shown in figure 4-5. The transformer supplies the source voltage for two diode rectifiers, D1 and D2. This power transformer has a center-tapped, high-voltage secondary winding that is divided into two equal parts (W1 and W2). W1 provides the source voltage for D1, and W2 provides the source voltage for D2. The connections to the diodes are arranged so that the diodes conduct on alternate half cycles.

During one alternation of the secondary voltage, the polarities are as shown in view A. The source for D2 is the voltage induced into the lower half of the secondary winding of the transformer (W2). At the specific instant of time shown in the figure, the anode voltage on D2 is negative, and D2 cannot conduct. Throughout the period of time during which the anode of D2 is negative, the anode of D1 is positive. Since the anode of D1 is positive, it conducts, causing current to flow through the load resistor in the direction shown by the arrow.

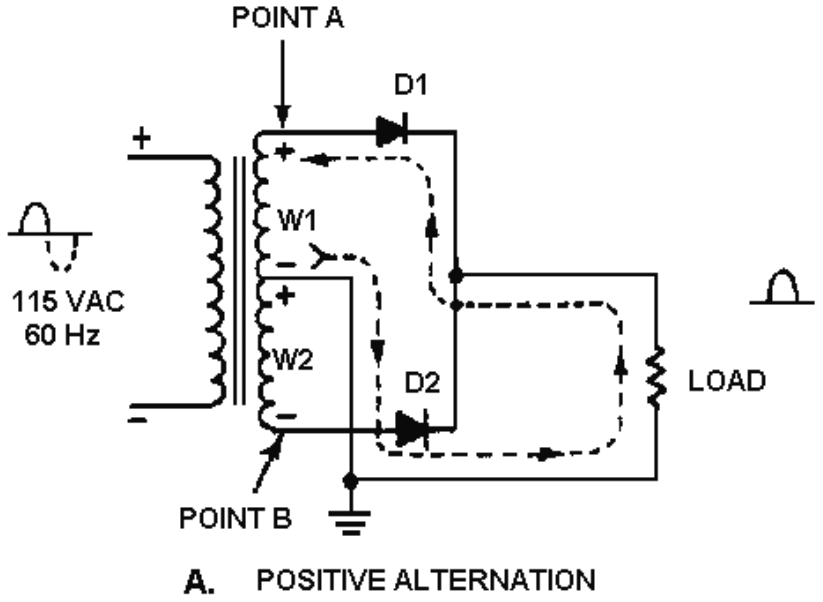

Figure 4-5A.—Full-wave rectifier. POSITIVE ALTERNATION

View B shows the next half cycle of secondary voltage. Now the polarities across W1 and W2 are reversed. During this alternation, the anode of D1 is driven negative and D1 cannot conduct. For the period of time that the anode of D1 is negative, the anode of D2 is positive, permitting D2 to conduct. Notice that the anode current of D2 passes through the load resistor in the same direction as the current of D1 did. In this circuit arrangement, a pulse of load current flows during each alternation of the input cycle. Since both alternations of the input voltage cycle are used, the circuit is called a FULL-WAVE RECTIFIER.

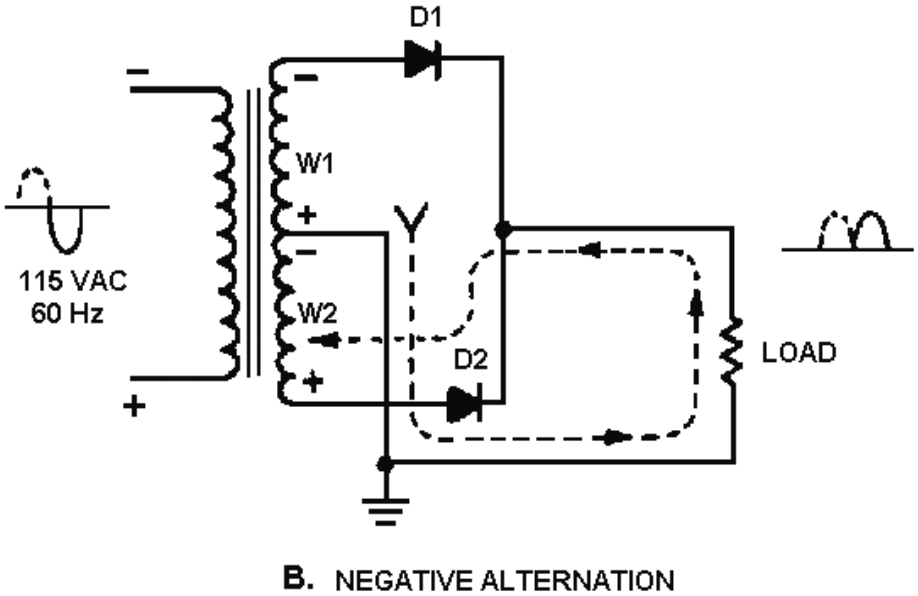

Figure 4-5B.—Full-wave rectifier. NEGATIVE ALTERNATION

Now that you have a basic understanding of how a full-wave rectifier works, let's cover in detail a practical full-wave rectifier and its waveforms.

A Practical Full-Wave Rectifier

A practical full-wave rectifier circuit is shown in view A of figure 4-6. It uses two diodes (D1 and D2) and a center-tapped transformer (T1). When the center tap is grounded, the voltages at the opposite ends of the secondary windings are 180 degrees out of phase with each other. Thus, when the voltage at point A is positive with respect to ground, the voltage at point B is negative with respect to ground. Let's examine the operation of the circuit during one complete cycle.

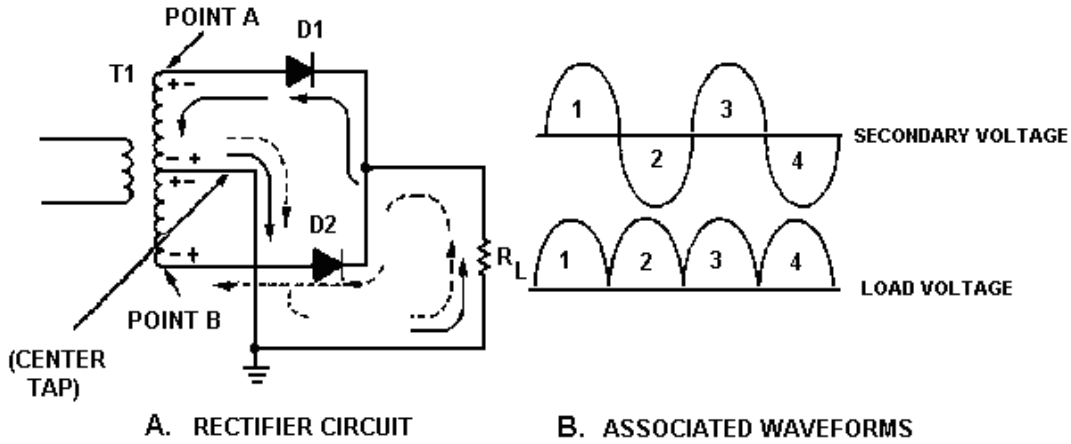

Figure 4-6.—Practical full-wave rectifier.

During the first half cycle (indicated by the solid arrows), the anode of D1 is positive with respect to ground and the anode of D2 is negative. As shown, current flows from ground (center tap), up through the load resistor (R_L), through diode D1 to point A. In the transformer, current flows from point A, through

the upper winding, and back to ground (center tap). When D1 conducts, it acts like a closed switch so that the positive half cycle is felt across the load (R_L).

During the second half cycle (indicated by the dotted lines), the polarity of the applied voltage has reversed. Now the anode of D2 is positive with respect to ground and the anode of D1 is negative. Now only D2 can conduct. Current now flows, as shown, from ground (center tap), up through the load resistor (R_L), through diode D2 to point B of T1. In the transformer, current flows from point B up through the lower windings and back to ground (center tap). Notice that the current flows across the load resistor (R_L) in the <u>same direction</u> for both halves of the input cycle.

View B represents the output waveform from the full-wave rectifier. The waveform consists of two pulses of current (or voltage) for each cycle of input voltage. The ripple frequency at the output of the full-wave rectifier is therefore <u>twice the line frequency</u>.

The higher frequency at the output of a full-wave rectifier offers a distinct advantage: Because of the higher ripple frequency, the output is closely approximate to pure dc. The higher frequency also makes filtering much easier than it is for the output of the half-wave rectifier.

In terms of peak value, the average value of current and voltage at the output of the full-wave rectifier is twice as great as that at the output of the half-wave rectifier. The relationship between the peak value and the average value is illustrated in figure 4-7. Since the output waveform is essentially a sine wave with both alternations at the same polarity, the average current or voltage is 63.7 percent (or 0.637) of the peak current or voltage.

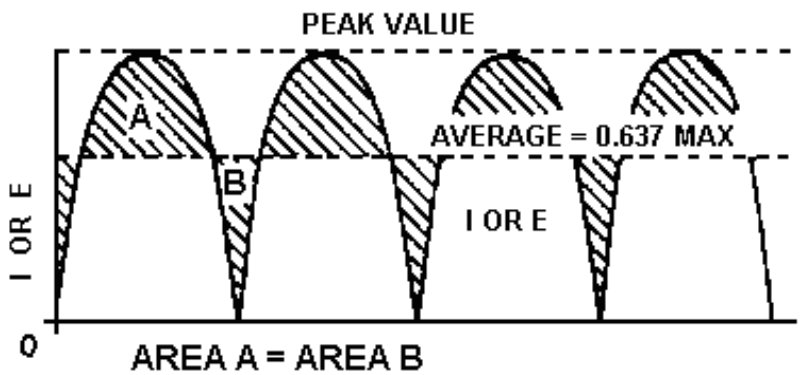

Figure 4-7.—Peak and average values for a full-wave rectifier.

As an equation:

Where:

E_{max} = The peak value of the load voltage pulse

$E_{avg} = 0.637 \times E_{max}$ (the average load voltage)

I_{max} = The peak value of the load current pulse

$I_{avg} = 0.637 \times I_{max}$ (the average load current)

Example: The total voltage across the high-voltage secondary of a transformer used to supply a full-wave rectifier is 300 volts. Find the average load voltage (ignore the drop across the diode).

Solution: Since the total secondary voltage (E_S) is 300 volts, each diode is supplied one-half of this value, or 150 volts. Because the secondary voltage is an rms value, the peak load voltage is:

$$E_{max} = 1.414 \times E_S$$

$$E_{max} = 1.414 \times 150$$

$$E_{max} = 212 \text{ volts}$$

The average load voltage is:

$$E_{avg} = 0.637 \times E_{max}$$

$$E_{avg} = 0.637 \times 212$$

$$E_{avg} = 135 \text{ volts}$$

NOTE: If you have problems with this equation, review the portion of *NEETS*, module 2, that pertain to this subject.

As you may recall from your past studies in electricity, every circuit has advantages and disadvantages. The full-wave rectifier is no exception. In studying the full-wave rectifier, you may have found that by doubling the output frequency, the average voltage has doubled, and the resulting signal is much easier to filter because of the high ripple frequency. The only disadvantage is that the peak voltage in the full-wave rectifier is only half the peak voltage in the half-wave rectifier. This is because the secondary of the power transformer in the full-wave rectifier is center tapped; therefore, only half the source voltage goes to each diode.

Fortunately, there is a rectifier which produces the same peak voltage as a half-wave rectifier and the same ripple frequency as a full-wave rectifier. This circuit, known as the BRIDGE RECTIFIER, will be the subject of our next discussion.

Q8. What was the major factor that led to the development of the full-wave rectifier?

Q9. What is the ripple frequency of a full-wave rectifier with an input frequency of 60 Hz?

Q10. What is the average voltage (E_{avg}) Output of a full-wave rectifier with an output of 100 volts peak?

The Bridge Rectifier

When four diodes are connected as shown in figure 4-8, the circuit is called a BRIDGE RECTIFIER. The input to the circuit is applied to the diagonally opposite corners of the network, and the output is taken from the remaining two corners.

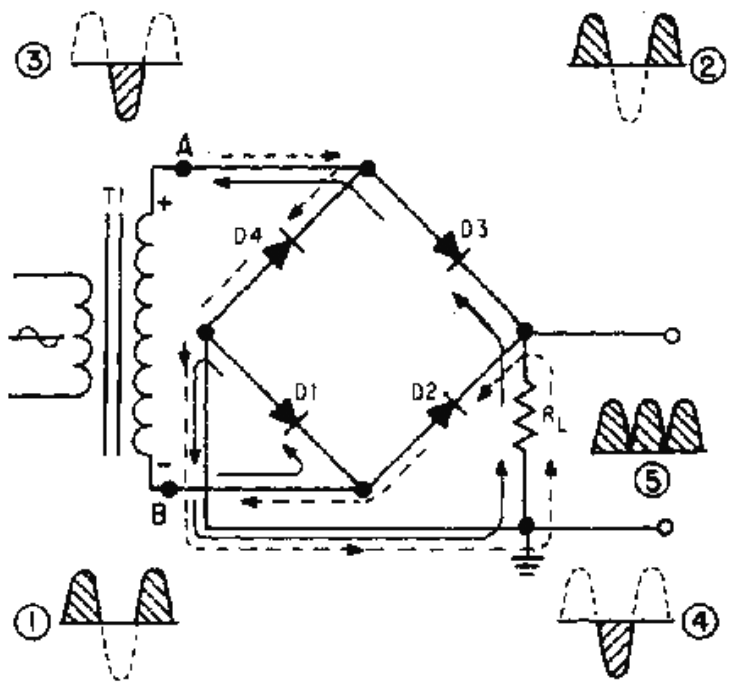

Figure 4-8.—Bridge rectifier.

One complete cycle of operation will be discussed to help you understand how this circuit works. We have discussed transformers in previous modules in the *NEETS* series and will not go into their characteristics at this time. Let us assume the transformer is working properly and there is a positive potential at point A and a negative potential at point B. The positive potential at point A will forward bias D3 and reverse bias D4. The negative potential at point B will forward bias D1 and reverse bias D2. At this time D3 and D1 are forward biased and will allow current flow to pass through them; D4 and D2 are reverse biased and will block current flow. The path for current flow is from point B through D1, up through R_L, through D3, through the secondary of the transformer back to point B. This path is indicated by the solid arrows. Waveforms (1) and (2) can be observed across D1 and D3.

One-half cycle later the polarity across the secondary of the transformer reverses, forward biasing D2 and D4 and reverse biasing D1 and D3. Current flow will now be from point A through D4, up through R_L, through D2, through the secondary of T1, and back to point A. This path is indicated by the broken arrows. Waveforms (3) and (4) can be observed across D2 and D4. You should have noted that the current flow through R_L is always in the same direction. In flowing through R_L this current develops a voltage corresponding to that shown in waveform (5). Since current flows through the load (R_L) during both half cycles of the applied voltage, this bridge rectifier is a full-wave rectifier.

One advantage of a bridge rectifier over a conventional full-wave rectifier is that with a given transformer the bridge rectifier produces a voltage output that is nearly twice that of the conventional full-wave circuit. This may be shown by assigning values to some of the components shown in views A and B of figure 4-9. Assume that the same transformer is used in both circuits. The peak voltage developed between points X and Y is 1000 volts in both circuits. In the conventional full-wave circuit shown in view A, the peak voltage from the center tap to either X or Y is 500 volts. Since only one diode can conduct at any instant, the maximum voltage that can be rectified at any instant is 500 volts. Therefore, the maximum voltage that appears across the load resistor is nearly — but never exceeds — 500 volts, as a result of the small voltage drop across the diode. In the bridge rectifier shown in view B, the maximum voltage that can be rectified is the full secondary voltage, which is 1000 volts. Therefore, the peak output

voltage across the load resistor is nearly 1000 volts. With both circuits using the same transformer, the bridge rectifier circuit produces a higher output voltage than the conventional full-wave rectifier circuit.

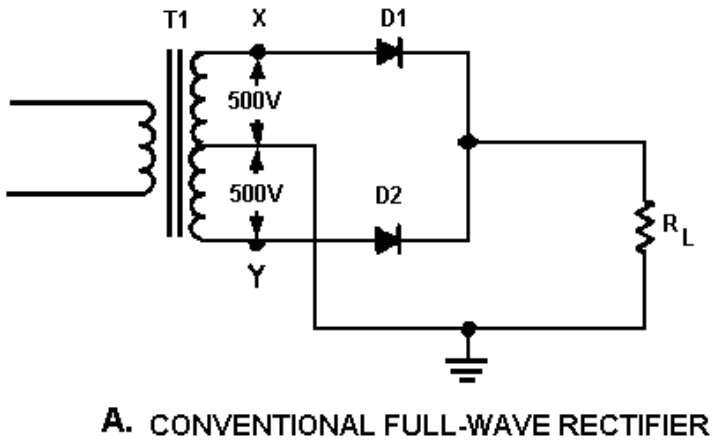

Figure 4-9A.—Comparison of a conventional and bridge full-wave rectifier. CONVENTIONAL FULL-WAVE RECTIFIER

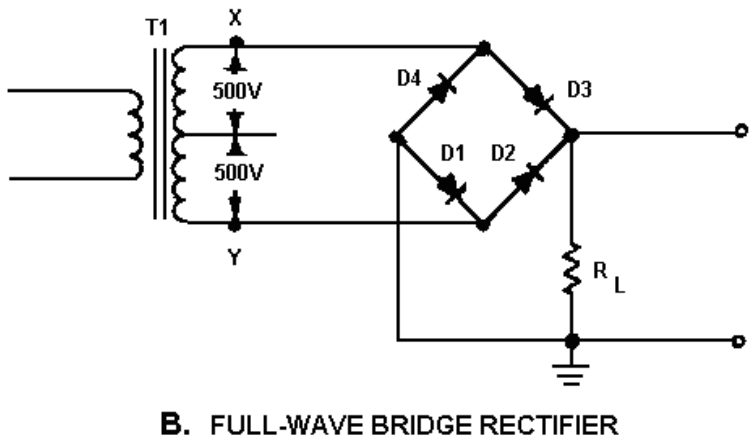

Figure 4-9B.—Comparison of a conventional and bridge full-wave rectifier. FULL-WAVE BRIDGE RECTIFIER

Q11. What is the main disadvantage of a conventional full-wave rectifier?

Q12. What main advantage does a bridge rectifier have over a conventional full-wave rectifier?

FILTERS

While the output of a rectifier is a pulsating dc, most electronic circuits require a substantially pure dc for proper operation. This type of output is provided by single or multisection filter circuits placed between the output of the rectifier and the load.

There are four basic types of filter circuits:

- Simple capacitor filter
- LC choke-input filter

- LC capacitor-input filter (pi-type)
- RC capacitor-input filter (pi-type)

The function of each of these filters will be covered in detail in this chapter.

Filtering is accomplished by the use of capacitors, inductors, and/or resistors in various combinations. Inductors are used as series impedances to oppose the flow of alternating (pulsating dc) current. Capacitors are used as shunt elements to bypass the alternating components of the signal around the load (to ground). Resistors are used in place of inductors in low current applications.

Let's briefly review the properties of a capacitor. First, a capacitor opposes any change in voltage. The opposition to a change in current is called capacitive reactance (X_C) and is measured in ohms. The capacitive reactance is determined by the frequency (f) of the applied voltage and the capacitance (C) of the capacitor.

$$X_C = \frac{1}{2\pi fC} \text{ or } \frac{.159}{fC}$$

From the formula, you can see that if frequency or capacitance is increased, the X_C decreases. Since filter capacitors are placed in parallel with the load, a low X_C will provide better filtering than a high X_C. For this to be accomplished, a better shunting effect of the ac around the load is provided, as shown in figure 4-10.

To obtain a steady dc output, the capacitor must charge almost instantaneously to the value of applied voltage. Once charged, the capacitor must retain the charge as long as possible. The capacitor must have a short charge time constant (view A). This can be accomplished by keeping the internal resistance of the power supply as small as possible (fast charge time) and the resistance of the load as large as possible (for a slow discharge time as illustrated in view B).

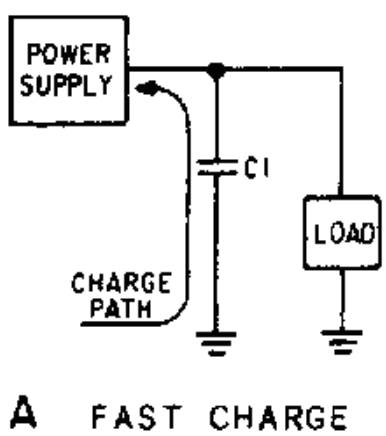

Figure 4-10A.—Capacitor filter. FAST CHARGE

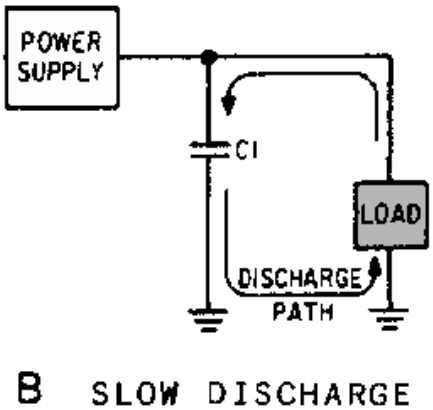

Figure 4-10B.—Capacitor filter. SLOW DISCHARGE

From your earlier studies in basic electricity, you may remember that one time constant is defined as the time it takes a capacitor to charge to 63.2 percent of the applied voltage or to discharge to 36.8 percent of its total charge. This action can be expressed by the following equation:

$$t = RC$$

Where: R represents the resistance of the charge or discharge path

And: C represents the capacitance of the capacitor.

You should also recall that a capacitor is considered fully charged after five RC time constants. Refer to figure 4-11. You can see that a steady dc output voltage is obtained when the capacitor charges rapidly and discharges as slowly as possible.

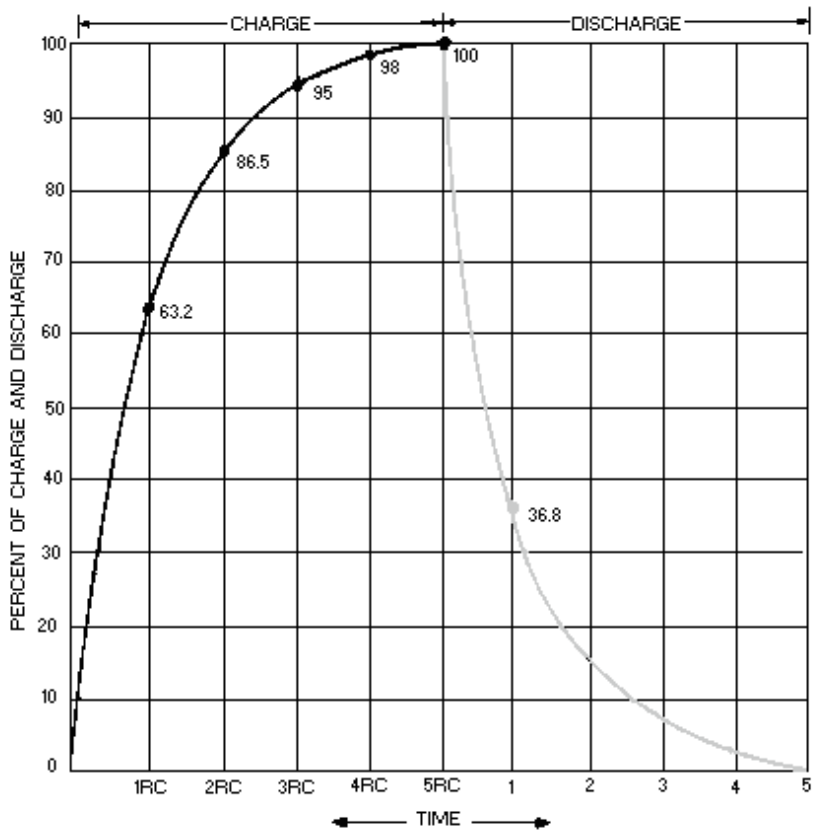

Figure 4-11.—RC time constant.

In filter circuits the capacitor is the common element to both the charge and the discharge paths. Therefore, to obtain the longest possible discharge time, you want the capacitor to be as large as possible. Another way to look at it is: The capacitor acts as a short circuit around the load (as far as the ac component is concerned), and since

$$X_C = \frac{1}{2\pi fC}$$

the <u>larger</u> the value of the capacitor (C), the <u>smaller</u> the opposition (X_C) or reactance to ac.

Now let's look at inductors and their application in filter circuits. Remember, AN INDUCTOR OPPOSES ANY CHANGE IN CURRENT. In case you have forgotten, a change in current through an inductor produces a changing electromagnetic field. The changing field, in turn, cuts the windings of the wire in the inductor and thereby produces a counter electromotive force (CEMF). It is the CEMF that opposes the change in circuit current. Opposition to a change in current at a given frequency is called inductive reactance (X_L) and is measured in ohms. The inductive reactance (X_L) of an inductor is determined by the applied frequency and the inductance of the inductor.

Mathematically,

$$\mathbf{X_L = 2\pi fL}$$

If frequency or inductance is increased, the X_L increases. Since inductors are placed in series with the load (as shown in figure 4-12), the larger the X_L, the larger the ac voltage developed across the load.

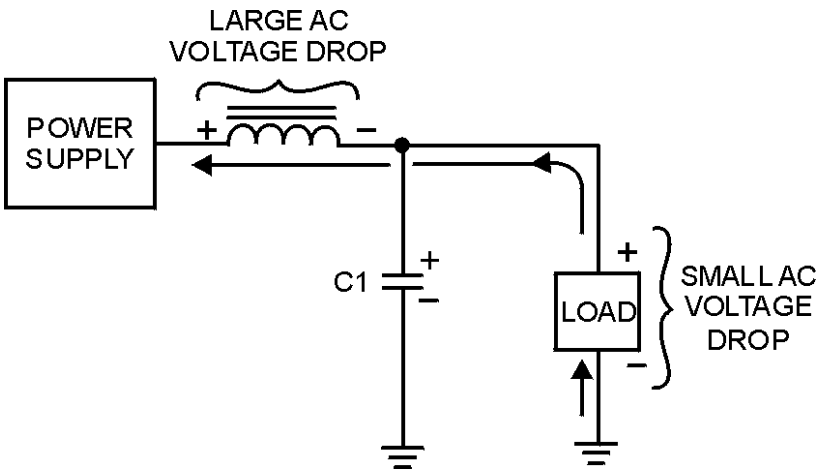

Figure 4-12.—Voltage drops in an inductive filter.

Now refer to figure 4-13. When the current starts to flow through the coil, an expanding magnetic field builds up around the inductor. This magnetic field around the coil develops the CEMF that opposes the change in current. When the rectifier current decreases, as shown in figure 4-14, the magnetic field collapses and again cuts the turns (windings) of wire, thus inducing current into the coil. This additional current merges with the rectifier current and attempts to keep it at its original level.

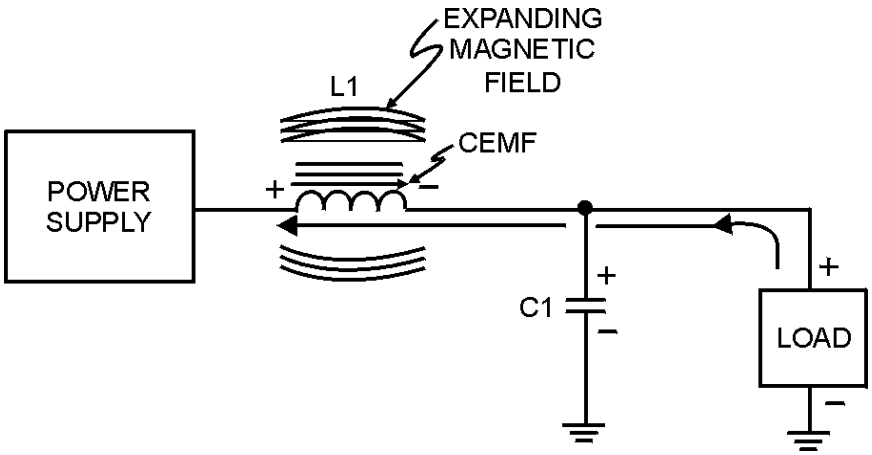

Figure 4-13.—Inductive filter (expanding field).

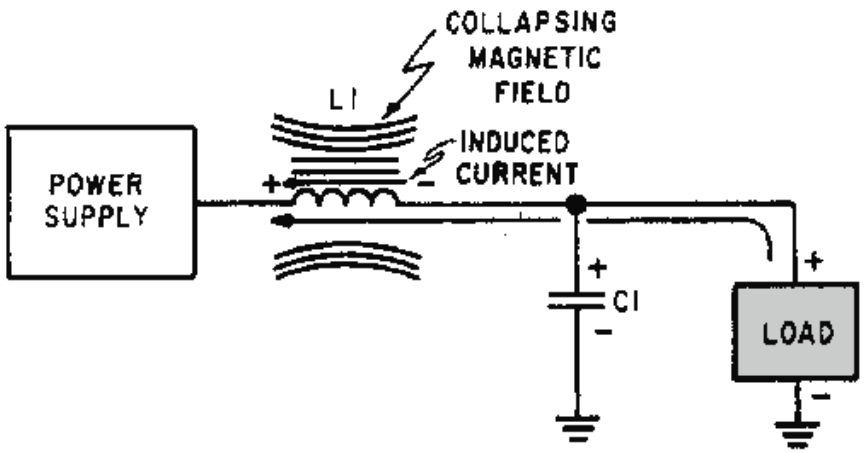

Figure 4-14.—Inductive filter (collapsing field).

Now that you have read how the components in a filter circuit react to current flow from the rectifier, the different types of filter circuits in use today will be discussed.

Q13. If you increase the value of the capacitor, will the X_C increase or decrease? Why?

The Capacitor Filter

The simple capacitor filter is the most basic type of power supply filter. The application of the simple capacitor filter is very limited. It is sometimes used on extremely high-voltage, low-current power supplies for cathode-ray and similar electron tubes, which require very little load current from the supply. The capacitor filter is also used where the power-supply ripple frequency is not critical; this frequency can be relatively high. The capacitor (C1) shown in figure 4-15 is a simple filter connected across the output of the rectifier in parallel with the load.

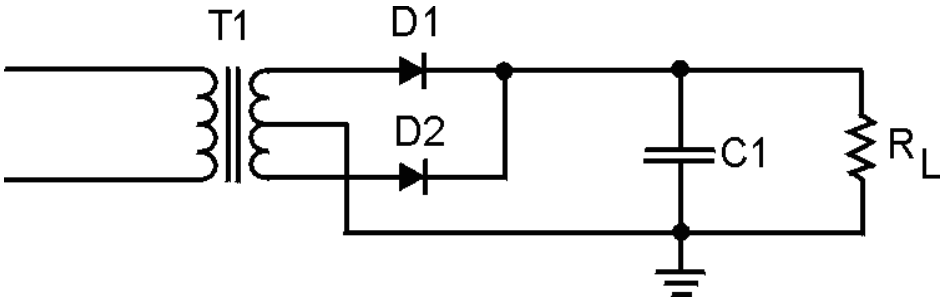

Figure 4-15.—Full-wave rectifier with a capacitor filter.

When this filter is used, the RC charge time of the filter capacitor (C1) must be short and the RC discharge time must be long to eliminate ripple action. In other words, the capacitor must charge up fast, preferably with no discharge at all. Better filtering also results when the input frequency is high; therefore, the full-wave rectifier output is easier to filter than that of the half-wave rectifier because of its higher frequency.

For you to have a better understanding of the effect that filtering has on E_{avg}, a comparison of a rectifier circuit with a filter and one without a filter is illustrated in views A and B of figure 4-16. The

output waveforms in figure 4-16 represent the unfiltered and filtered outputs of the half-wave rectifier circuit. Current pulses flow through the load resistance (R_L) each time a diode conducts. The dashed line indicates the average value of output voltage. For the half-wave rectifier, E_{avg} is less than half (or approximately 0.318) of the peak output voltage. This value is still much less than that of the applied voltage. With no capacitor connected across the output of the rectifier circuit, the waveform in view A has a large pulsating component (ripple) compared with the average or dc component. When a capacitor is connected across the output (view B), the average value of output voltage (E_{avg}) is increased due to the filtering action of capacitor C1.

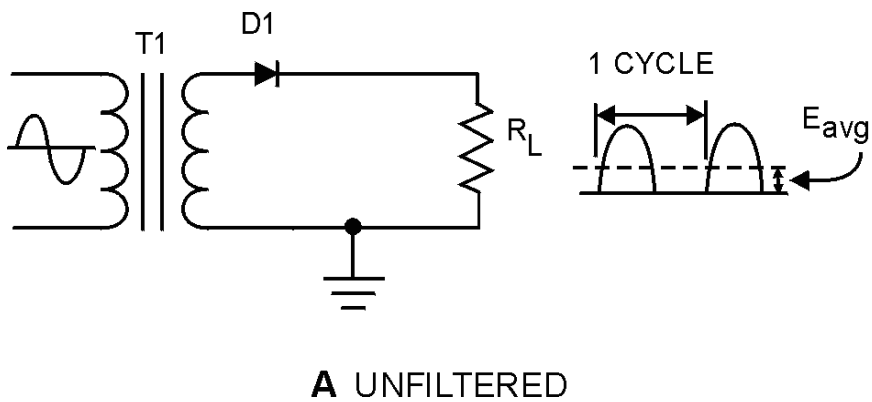

Figure 4-16A.—Half-wave rectifier with and without filtering. UNFILTERED

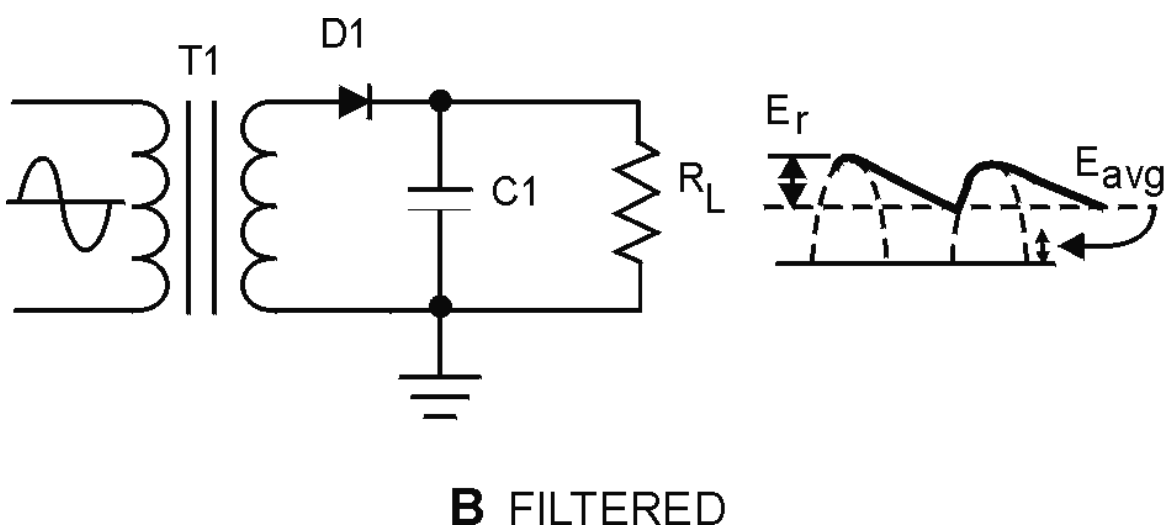

Figure 4-16B.—Half-wave rectifier with and without filtering. FILTERED

The value of the capacitor is fairly large (several microfarads), thus it presents a relatively low reactance to the pulsating current and it stores a substantial charge.

The rate of charge for the capacitor is limited only by the resistance of the conducting diode which is relatively low. Therefore, the RC charge time of the circuit is relatively short. As a result, when the pulsating voltage is first applied to the circuit, the capacitor charges rapidly and almost reaches the peak value of the rectified voltage within the first few cycles. The capacitor attempts to charge to the peak value of the rectified voltage anytime a diode is conducting, and tends to retain its charge when the

rectifier output falls to zero. (The capacitor cannot discharge immediately.) The capacitor slowly discharges through the load resistance (R_L) during the time the rectifier is nonconducting.

The rate of discharge of the capacitor is determined by the value of capacitance and the value of the load resistance. If the capacitance and load-resistance values are large, the RC discharge time for the circuit is relatively long.

A comparison of the waveforms shown in figure 4-16 (view A and view B) illustrates that the addition of C1 to the circuit results in an increase in the average of the output voltage (E_{avg}) and a reduction in the amplitude of the ripple component (E_r) which is normally present across the load resistance.

Now, let's consider a complete cycle of operation using a half-wave rectifier, a capacitive filter (C1), and a load resistor (R_L). As shown in view A of figure 4-17, the capacitive filter (C1) is assumed to be large enough to ensure a small reactance to the pulsating rectified current. The resistance of R_L is assumed to be much greater than the reactance of C1 at the input frequency. When the circuit is energized, the diode conducts on the positive half cycle and current flows through the circuit, allowing C1 to charge. C1 will charge to approximately the peak value of the input voltage. (The charge is less than the peak value because of the voltage drop across the diode (D1)). In view A of the figure, the charge on C1 is indicated by the heavy solid line on the waveform. As illustrated in view B, the diode cannot conduct on the negative half cycle because the anode of D1 is negative with respect to the cathode. During this interval, C1 discharges through the load resistor (R_L). The discharge of C1 produces the downward slope as indicated by the solid line on the waveform in view B. In contrast to the abrupt fall of the applied ac voltage from peak value to zero, the voltage across C1 (and thus across R_L) during the discharge period gradually decreases until the time of the next half cycle of rectifier operation. Keep in mind that for good filtering, the filter capacitor should charge up as fast as possible and discharge as little as possible.

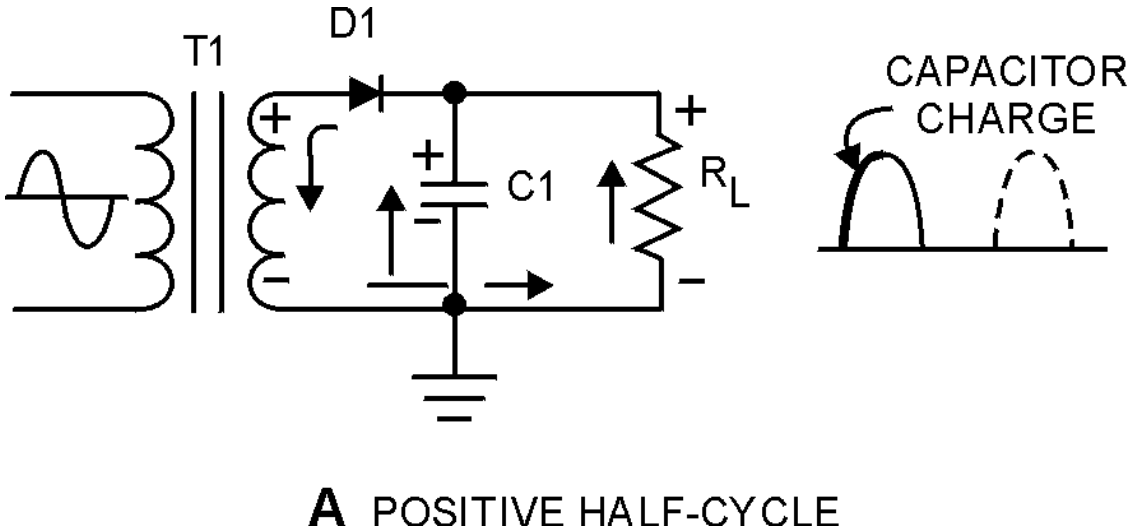

Figure 4-17A.—Capacitor filter circuit (positive and negative half cycles). POSITIVE HALF-CYCLE

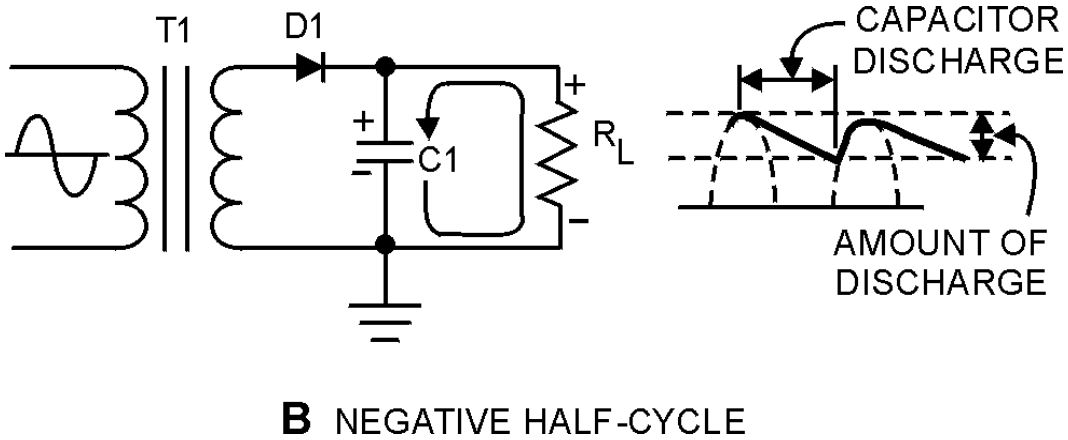

Figure 4-17B.—Capacitor filter circuit (positive and negative half cycles). NEGATIVE HALF-CYCLE

Since practical values of C1 and R_L ensure a more or less gradual decrease of the discharge voltage, a substantial charge remains on the capacitor at the time of the next half cycle of operation. As a result, no current can flow through the diode until the rising ac input voltage at the anode of the diode exceeds the voltage on the charge remaining on C1. The charge on C1 is the cathode potential of the diode. When the potential on the anode exceeds the potential on the cathode (the charge on C1), the diode again conducts, and C1 begins to charge to approximately the peak value of the applied voltage.

After the capacitor has charged to its peak value, the diode will cut off and the capacitor will start to discharge. Since the fall of the ac input voltage on the anode is considerably more rapid than the decrease on the capacitor voltage, the cathode quickly become more positive than the anode, and the diode ceases to conduct.

Operation of the simple capacitor filter using a full-wave rectifier is basically the same as that discussed for the half-wave rectifier. Referring to figure 4-18, you should notice that because one of the diodes is always conducting on. either alternation, the filter capacitor charges and discharges during each half cycle. (Note that each diode conducts only for that portion of time when the peak secondary voltage is greater than the charge across the capacitor.)

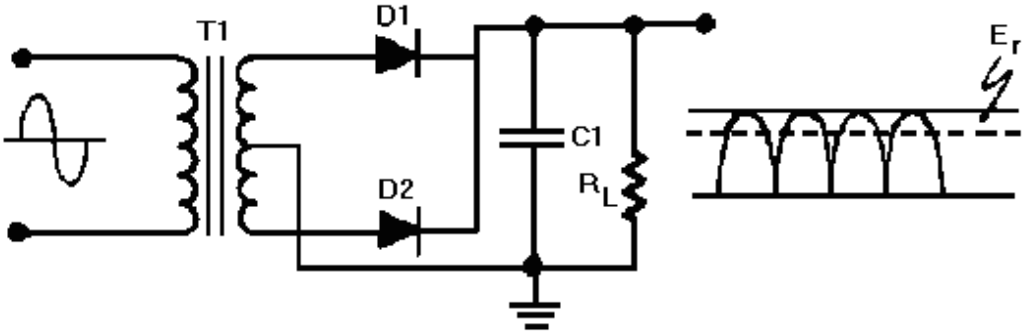

Figure 4-18.—Full-wave rectifier (with capacitor filter).

Another thing to keep in mind is that the ripple component (E) of the output voltage is an ac voltage and the average output voltage (E_{avg}) is the dc component of the output. Since the filter capacitor offers a relatively low impedance to ac, the majority of the ac component flows through the filter capacitor. The ac component is therefore bypassed (shunted) around the load resistance, and the entire dc component (or

E_{avg}) flows through the load resistance. This statement can be clarified by using the formula for X_C in a half-wave and full-wave rectifier. First, you must establish some values for the circuit.

HALFWAVE RECTIFIER

FREQUENCY AT
RECTIFIER OUTPUT: 60 Hz

VALUE OF FILTER
CAPACITOR: 30μF

LOAD RESISTANCE: 10kΩ

$$X_C = \frac{1}{2\pi fC}$$

$$X_C = \frac{.159}{fC}$$

$$X_C = \frac{.159}{60 \times .000030}$$

$$X_C = \frac{.159}{.0018}$$

$$X_C = 88.3\Omega$$

FREQUENCY AT
RECTIFIER OUTPUT: 120Hz

VALUE OF FILTER
CAPACITOR: 30μF

LOAD RESISTANCE: 10kΩ

$$X_C = \frac{1}{2\pi fC}$$

$$X_C = \frac{.159}{fC}$$

$$X_C = \frac{.159}{120 \times .000030}$$

$$X_C = \frac{.159}{.0036}$$

$$X_C = 44.16\Omega$$

As you can see from the calculations, by doubling the frequency of the rectifier, you reduce the impedance of the capacitor by one-half. This allows the ac component to pass through the capacitor more easily. As a result, a full-wave rectifier output is much easier to filter than that of a half-wave rectifier. Remember, the smaller the X_C of the filter capacitor with respect to the load resistance, the better the filtering action. Since

$$X_C = \frac{1}{2\pi fC}$$

the largest possible capacitor will provide the best filtering. Remember, also, that the load resistance is an important consideration. If load resistance is made small, the load current increases, and the average value of output voltage (E_{avg}) decreases. The RC discharge time constant is a direct function of the value of the load resistance; therefore, the rate of capacitor voltage discharge is a direct function of the current through the load. The greater the load current, the more rapid the discharge of the capacitor, and the lower the average value of output voltage. For this reason, the simple capacitive filter is seldom used with rectifier circuits that must supply a relatively large load current. Using the simple capacitive filter in conjunction with a full-wave or bridge rectifier provides improved filtering because the increased ripple frequency decreases the capacitive reactance of the filter capacitor.

Q14. What is the most basic type of filter?

Q15. In a capacitor filter, is the capacitor in series or in parallel with the load?

Q16. Is filtering better at a high frequency or at a low frequency?

Q17. Does a filter circuit increase or decrease the average output voltage?

Q18. What determines the rate of discharge of the capacitor in a filter circuit?

Q19. Does low ripple voltage indicate good or bad filtering?

Q20. Is a full-wave rectifier output easier to filter than that of a half-wave rectifier?

LC Choke-Input Filter

The LC choke-input filter is used primarily in power supplies where voltage regulation is important and where the output current is relatively high and subject to varying load conditions. This filter is used in high power applications such as those found in radars and communication transmitters.

Notice in figure 4-19 that this filter consists of an input inductor (L1), or filter choke, and an output filter capacitor (C1). Inductor L1 is placed at the input to the filter and is in series with the output of the rectifier circuit. Since the action of an inductor is to oppose any change in current flow, the inductor tends to keep a constant current flowing to the load throughout the complete cycle of the applied voltage. As a result, the output voltage never reaches the peak value of the applied voltage. Instead, the output voltage approximates the average value of the rectified input to the filter, as shown in the figure. The reactance of the inductor (X_L) reduces the amplitude of ripple voltage without reducing the dc output voltage by an appreciable amount. (The dc resistance of the inductor is just a few ohms.)

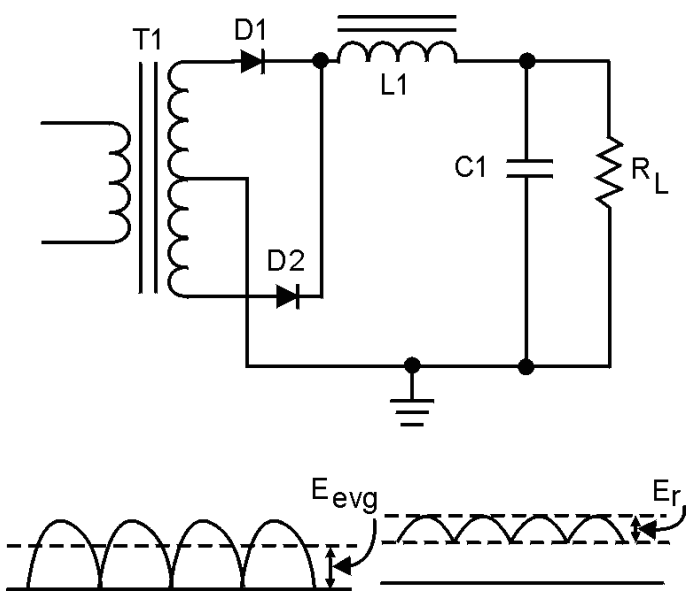

Figure 4-19.—LC choke-input filter.

The shunt capacitor (C1) charges and discharges at the ripple frequency rate, but the amplitude of the ripple voltage (E_r) is relatively small because the inductor (L1) tends to keep a constant current flowing from the rectifier circuit to the load. In addition, the reactance of the shunt capacitor (X_C) presents a low impedance to the ripple component existing at the output of the filter, and thus shunts the ripple component around the load. The capacitor attempts to hold the output voltage relatively constant at the average value of the voltage.

The value of the filter capacitor (C1) must be relatively large to present a low opposition (X_C) to the pulsating current and to store a substantial charge. The rate of the charge for the capacitor is limited by the low impedance of the ac source (the transformer), by the small resistance of the diode, and by the counter electromotive force (CEMF) developed by the coil. Therefore, the RC charge time constant is short compared to its discharge time. (This comparison in RC charge and discharge paths is illustrated in

views A and B of figure 4-20.) Consequently, when the pulsating voltage is first applied to the LC choke-input filter, the inductor (L1) produces a CEMF which opposes the constantly increasing input voltage. The net result is to effectively prevent the rapid charging of the filter capacitor (C1). Thus, instead of reaching the peak value of the input voltage, C1 only charges to the average value of the input voltage. After the input voltage reaches its peak and decreases sufficiently, the capacitor C1) attempts to discharge through the load resistance R_L). C1 will only partially discharge, as indicated in view B of the figure, because of its relatively long discharge time constant. The larger the value of the filter capacitor, the better the filtering action. However, because of physical size, there is a practical limitation to the maximum value of the capacitor.

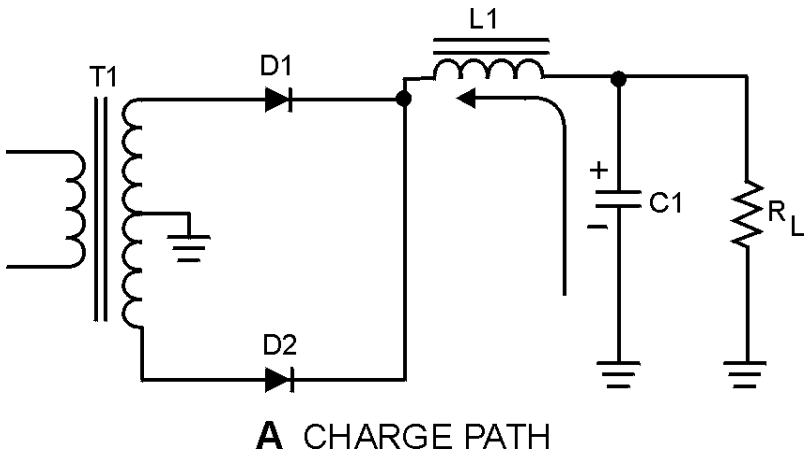

Figure 4-20A.—LC choke-input filter (charge and discharge paths). CHARGE PATH

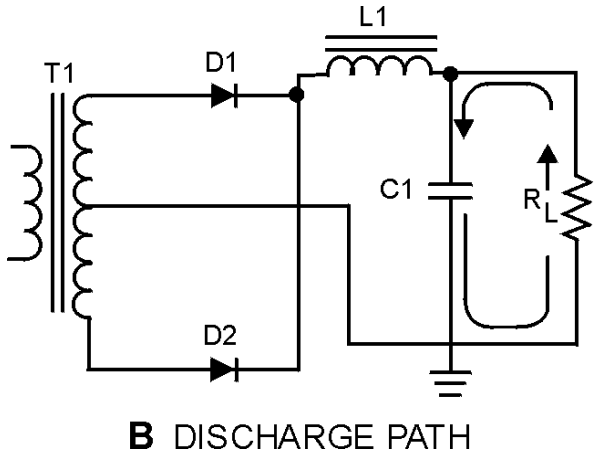

Figure 4-20B.—LC choke-input filter (charge and discharge paths). DISCHARGE PATH

The inductor (also referred to as the filter choke or coil) serves to maintain the current flow to the filter output (R_L) at a nearly constant level during the charge and discharge periods of the filter capacitor. The inductor (L1) and the capacitor (C1) form a voltage divider for the ac component (ripple) of the applied input voltage. This is shown in views A and B of figure 4-21. As far as the ripple component is concerned, the inductor offers a high impedance (Z) and the capacitor offers a low impedance (view B). As a result, the ripple component (E_r) appearing across the load resistance is greatly attenuated (reduced). The inductance of the filter choke opposes changes in the value of the current flowing through it;

therefore, the average value of the voltage produced across the capacitor contains a much smaller value of ripple component (E_r) than the value of ripple produced across the choke.

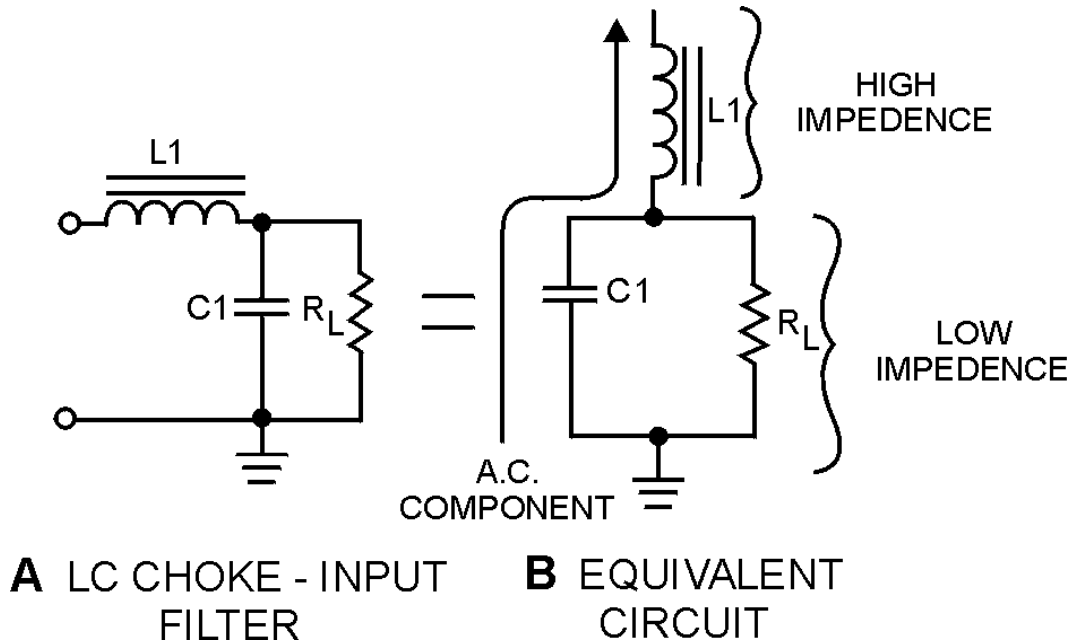

Figure 4-21.—LC choke-input filter.

Now look at figure 4-22 which illustrates a complete cycle of operation for a full-wave rectifier circuit used to supply the input voltage to the filter. The rectifier voltage is developed across the capacitor (C1). The ripple voltage at the output of the filter is the alternating component of the input voltage reduced in amplitude by the filter section. Each time the anode of a diode goes positive with respect to the cathode, the diode conducts and C1 charges. Conduction occurs twice during each cycle for a full-wave rectifier. For a 60-hertz supply, this produces a 120-hertz ripple voltage. Although the diodes alternate (one conducts while the other is nonconducting), the filter input voltage is not steady. As the anode voltage of the conducting diode increases (on the positive half of the cycle), capacitor C1 charges-the charge being limited by the impedance of the secondary transformer winding, the diode's forward (cathode-to-anode) resistance, and the counter electromotive force developed by the choke. During the nonconducting interval (when the anode voltage drops below the capacitor charge voltage), C1 discharges through the load resistor (R_L). The components in the discharge path have a long time constant; thus, C1 discharges more slowly than it charges.

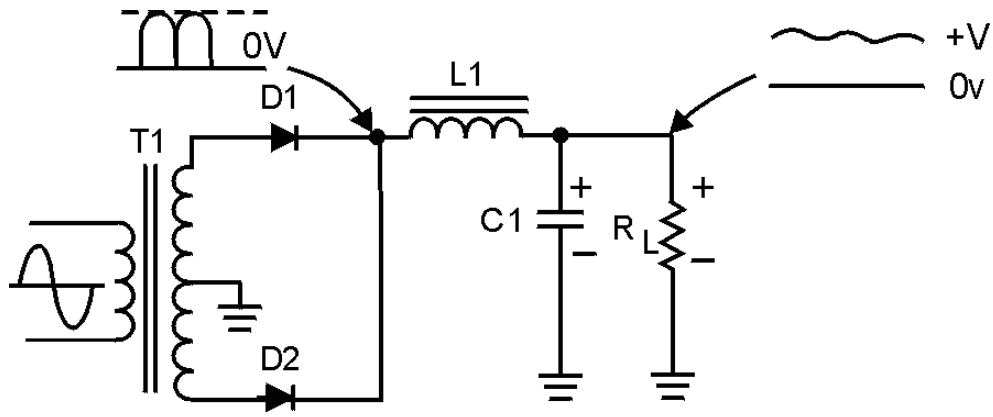

Figure 4-22.—Filtering action of the LC choke-input filter.

The choke (L1) is usually a large value, from 1 to 20 henries, and offers a large inductive reactance to the 120-hertz ripple component produced by the rectifier. Therefore, the effect that L1 has on the charging of the capacitor (C1) must be considered. Since L1 is connected in series with the parallel branch consisting of C1 and R_L, a division of the ripple (ac) voltage and the output (dc) voltage occurs. The greater the impedance of the choke, the less the ripple voltage that appears across C1 and the output. The dc output voltage is fixed mainly by the dc resistance of the choke.

Now that you have read how the LC choke-input filter functions, it will be discussed with actual component values applied. For simplicity, the input frequency at the primary of the transformer will be 117 volts 60 hertz. Both half-wave and full-wave rectifier circuits will be used to provide the input to the filter.

Starting with the half-wave configuration shown in figure 4-23, the basic parameters are: With 117 volts ac rms applied to the T1 primary, 165 volts ac peak is available at the secondary [(117 V) × (1.414) = 165 V]. You should recall that the ripple frequency of this half-wave rectifier is 60 hertz. Therefore, the capacitive reactance of C1 is:

$$X_C = \frac{1}{2\pi fC}$$

$$X_C = \frac{1}{(2)(3.14)(60)(10)(10^{-6})}$$

$$X_C = \frac{(1)(10^6)}{3768}$$

$$X_C = 265\Omega$$

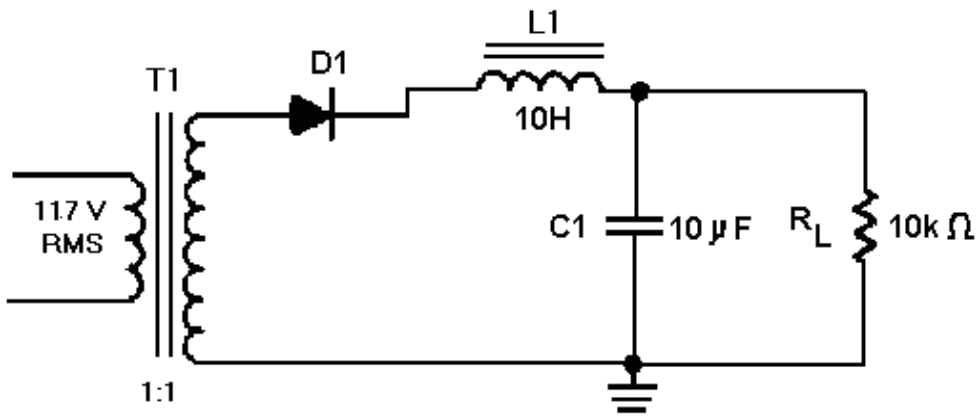

Figure 4-23.—Half-wave rectifier with an LC choke-input filter.

This means that the capacitor (C1) offers 265 ohms of opposition to the ripple current. Note, however, that the capacitor offers an infinite impedance to direct current. The inductive reactance of L1 is:

$$X_L = 2\pi fL$$
$$X_L = (2)(3.14)(60)(10)$$
$$X_L = 3.8 \text{ kilohms}$$

The above calculation shows that L1 offers a relatively high opposition (3.8 kilohms) to the ripple in comparison to the opposition offered by C1 (265 ohms). Thus, more ripple voltage will be dropped across L1 than across C1. In addition, the impedance of C1 (265 ohms) is relatively low with respect to the resistance of the load (10 kilohms). Therefore, more ripple current flows through C1 than the load. In other words, C1 shunts most of the ac component around the load.

Let's go a step further and redraw the filter circuit so that you can see the voltage divider action. Refer to view A of figure 4-24. Remember, the 165 volts peak 60 hertz provided by the rectifier consists of both an ac and a dc component. This first discussion will be about the ac component. From the figure, you see that the capacitor (C1) offers the least opposition (265 ohms) to the ac component. Therefore, the greater amount of ac will flow through C1. (The heavy line in view B indicates the ac current flow through the capacitor.) Thus the capacitor bypasses, or shunts, most of the ac around the load.

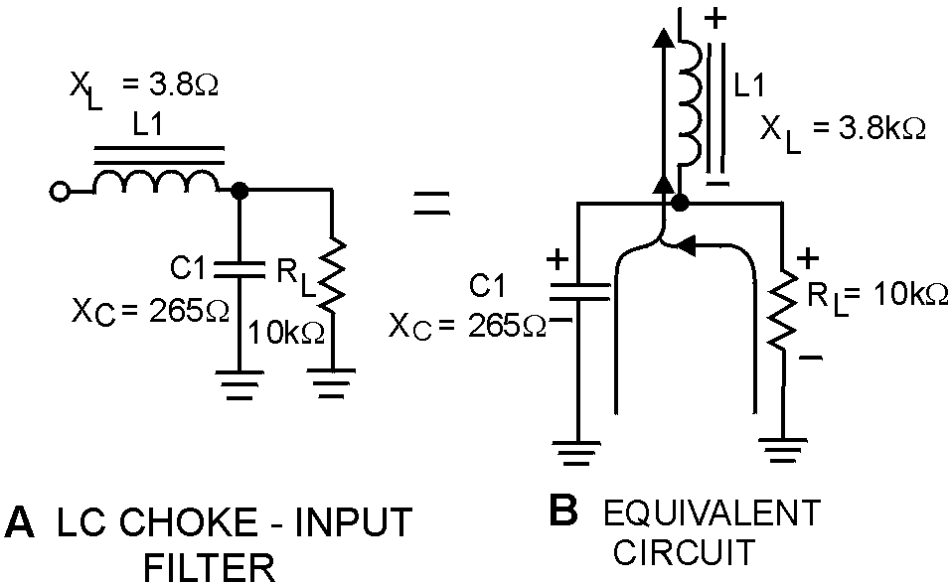

Figure 4-24.—Ac component in an LC choke-input filter.

By combining the X_C of C1 and the resistance of R_L into an equivalent circuit (view B), you will have an equivalent impedance of 265 ohms.

As a formula;

$$RT = \frac{(R1)(R2)}{R1 + R2}$$

You now have a voltage divider as illustrated in figure 4-25. You should see that because of the impedance ratios, a large amount of ripple voltage is dropped across L1, and a substantially smaller amount is dropped across C1 and R_L. You can further increase the ripple voltage across L1 by increasing the inductance ($X_L = 2\pi fL$).

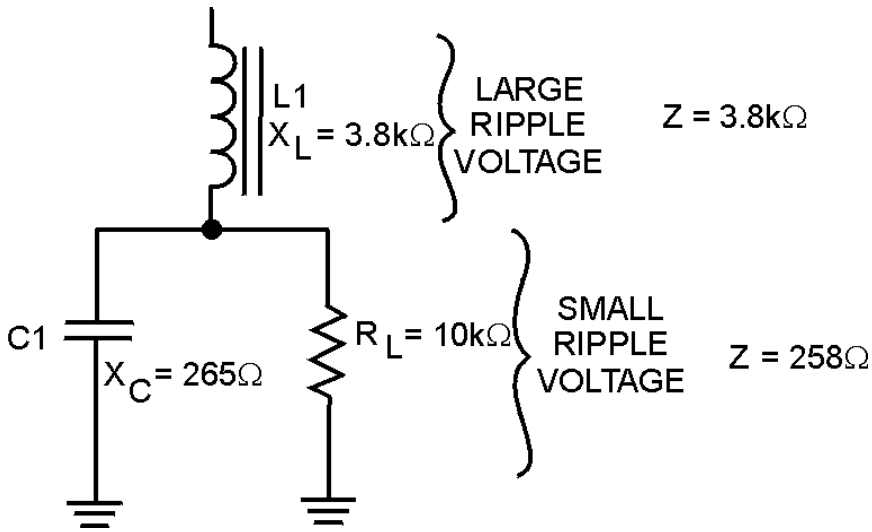

Figure 4-25.—Equivalent circuit of an LC choke-input filter.

Now let's discuss the dc component of the applied voltage. Remember, a capacitor offers an infinite (∞) impedance to the flow of direct current. The dc component, therefore, must flow through R_L and L1. As far as the dc is concerned, the capacitor does not exist. The coil and the load are therefore in series with each other. The dc resistance of a filter choke is very low (50 ohms average). Consequently, most of the dc component is developed across the load and a very small amount of the dc voltage is dropped across the coil, as shown in figure 4-26.

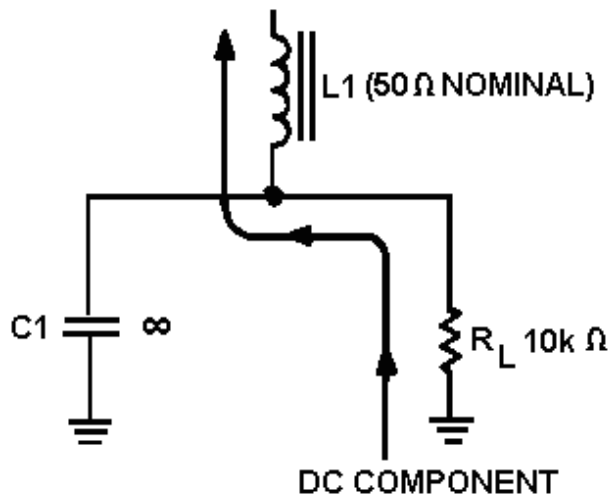

Figure 4-26.—Dc component in an LC choke-input filter.

As you may have noticed, both the ac and the dc components flow through L1. Because it is frequency sensitive, the coil provides a large resistance to ac and a small resistance to dc. In other words, the coil opposes any change in current. This property makes the coil a highly desirable filter component. Note that the filtering action of the LC choke-input filter is improved when the filter is used in conjunction with a full-wave rectifier, as shown in figure 4-27. This is due to the decrease in the X_C of the filter capacitor and the increase in the X_L of the choke. Remember, ripple frequency of a full-wave rectifier is twice that of a half-wave rectifier. For 60-hertz input, the ripple will be 120 hertz. The X_C of C1 and the X_L of L1 are calculated as follows:

$$X_C = \frac{1}{2\pi fC}$$

$$X_C = \frac{1}{(2)(3.14)(120)(10)(10^{-6})}$$

$$X_C = \frac{(1)(10^6)}{7536}$$

$$X_C = 132.5\Omega$$

$$X_L = 2\pi fL$$

$$X_L = (2)(3.14)(120)(10)$$

$$X_L = 7.5 \text{ kilohms}$$

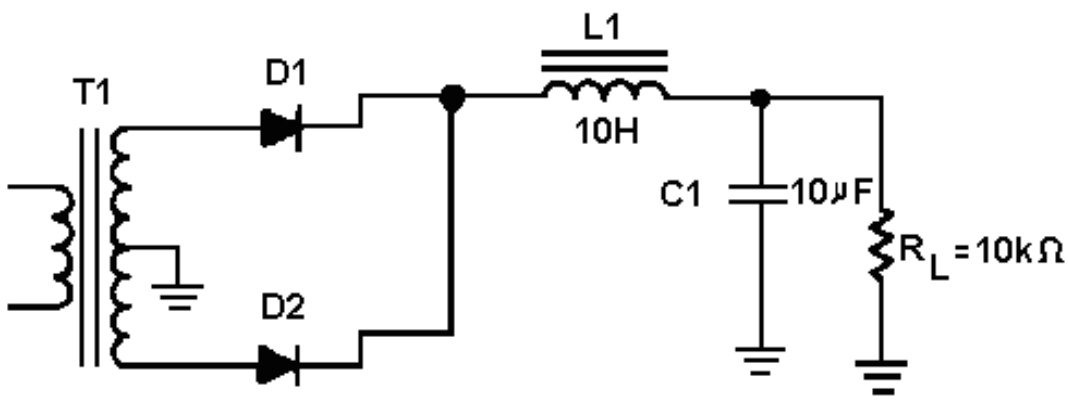

Figure 4-27.—Full-wave rectifier with an LC choke-input filter.

When the X_C of a filter capacitor is decreased, it provides less opposition to the flow of ac. The greater the ac flow through the capacitor, the lower the flow through the load. Conversely, the larger the X_L of the choke, the greater the amount of ac ripple developed across the choke; consequently, less ripple is developed across the load and better filtering is obtained.

Q21. In an LC choke-input filter, what prevents the rapid charging of the capacitor?

Q22. What is the range of values usually chosen for a choke?

Q23. If the impedance of the choke is increased, will the ripple amplitude increase or decrease?

FAILURE ANALYSIS OF AN LC CHOKE-INPUT FILTER.—The filter capacitors are subject to open circuits, short circuits, and excessive leakage; the series inductor is subject to open windings and, occasionally, shorted turns or a short circuit to the core.

The filter capacitor in the LC choke-input filter circuit is not subject to extreme voltage surges because of the protection offered by the inductor. However, the capacitor can become open, leaky, or shorted.

Shorted turns in the choke may reduce the value of inductance below the critical value. This will result in excessive peak-rectifier current, accompanied by an abnormally high output voltage, excessive ripple amplitude, and poor voltage regulation.

A choke winding that is open, or a choke winding which is shorted to the core will result in a no-output condition. A choke winding which is shorted to the core may cause overheating of the rectifier element(s) and blown fuses.

With the supply voltage removed from the input to the filter circuit, one terminal of the capacitor can be disconnected from the circuit. The capacitor should be checked with a capacitance analyzer to determine its capacitance and leakage resistance. When the capacitor is electrolytic, you must use the correct polarity at all times. A decrease in capacitance or losses within the capacitor can decrease the efficiency of the filter and can produce excessive ripple amplitude.

Resistor-Capacitor (RC) Filters

The RC capacitor-input filter is limited to applications in which the load current is small. This type of filter is used in power supplies where the load current is constant and voltage regulation is not necessary. For example, RC filters are used in high-voltage power supplies for cathode-ray tubes and in decoupling networks for multistage amplifiers.

Figure 4-28 shows an RC capacitor-input filter and associated waveforms. Both half-wave and full-wave rectifiers are used to provide the inputs. The waveform shown in view A of the figure represent the unfiltered output from a typical rectifier circuit. Note that the dashed lines in view A indicate the average value of output voltage (E_{avg}) for the half-wave rectifier. The average output voltage (E_{avg}) is less than half (approximately 0.318) the amplitude of the voltage peaks. The average value of output voltage (E_{avg}) for the full-wave rectifier is greater than half (approximately 0.637), but is still much less than, the peak amplitude of the rectifier-output waveform. With no filter circuit connected across the output of the rectifier circuit (unfiltered), the waveform has a large value of pulsating component (ripple) as compared to the average (or dc) component.

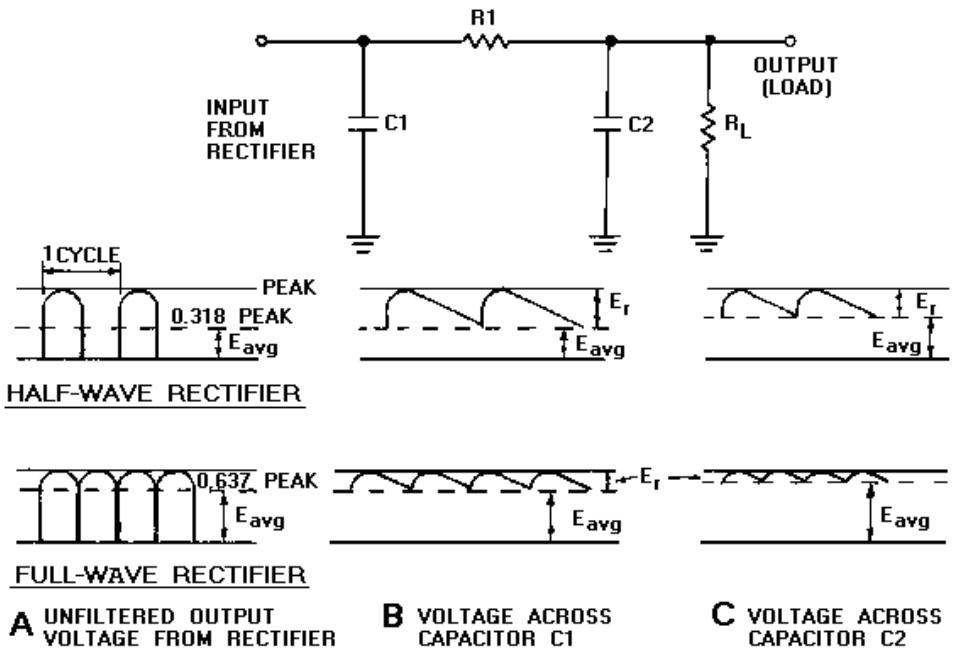

Figure 4-28.—RC filter and waveforms.

The RC filter in figure 4-28 consists of an input filter capacitor (C1), a series resistor (R1), and an output filter capacitor (C2). (This filter is sometimes referred to as an RC pi-section filter because its schematic symbol resembles the Greek letter π).

The single capacitor filter is suitable for many noncritical, low-current applications. However, when the load resistance is very low or when the percent of ripple must be held to an absolute minimum, the capacitor value required must be extremely large. While electrolytic capacitors are available in sizes up to 10,000 microfarads or greater, the large sizes are quite expensive. A more practical approach is to use a more sophisticated filter that can do the same job but that has lower capacitor values, such as the RC filter.

Views A, B, and C of figure 4-28 show the output waveforms of a half-wave and a full-wave rectifier. Each waveform is shown with an RC filter connected across the output. The following explanation of how a filter works will show you that an RC filter of this type does a much better job than the single capacitor filter.

C1 performs exactly the same function as it did in the single capacitor filter. It is used to reduce the percentage of ripple to a relatively low value. Thus, the voltage across C1 might consist of an average dc value of +100 volts with a ripple voltage of 10 volts peak-to-peak. This voltage is passed on to the R1-C2 network, which reduces the ripple even further.

C2 offers an infinite impedance (resistance) to the dc component of the output voltage. Thus, the dc voltage is passed to the load, but reduced in value by the amount of the voltage drop across R1. However, R1 is generally small compared to the load resistance. Therefore, the drop in the dc voltage by R1 is not a drawback.

Component values are designed so that the resistance of R1 is much greater than the reactance (X_C) of C2 at the ripple frequency. C2 offers a very low impedance to the ac ripple frequency. Thus, the ac

ripple senses a voltage divider consisting of R1 and C2 between the output of the rectifier and ground. Therefore, most of the ripple voltage is dropped across R1. Only a trace of the ripple voltage can be seen across C2 and the load. In extreme cases where the ripple must be held to an absolute minimum, a second stage of RC filtering can be added. In practice, the second stage is rarely required. The RC filter is extremely popular because smaller capacitors can be used with good results.

The RC filter has some disadvantages. First, the voltage drop across R1 takes voltage away from the load. Second, power is wasted in R1 and is dissipated in the form of unwanted heat. Finally, if the load resistance changes, the voltage across the load will change. Even so, the advantages of the RC filter overshadow these disadvantages in many cases.

Q24. Why is the use of large value capacitors in filter circuits discouraged?

Q25. When is a second RC filter stage used?

FAILURE ANALYSIS OF THE RESISTOR-CAPACITOR (RC) FILTER.—The shunt capacitors (C1 and C2) are subject to an open circuit, a short circuit, or excessive leakage. The series filter resistor (R1) is subject to changes in value and occasionally opens. Any of these troubles can be easily detected.

The input capacitor (C1) has the greatest pulsating voltage applied to it and is the most susceptible to voltage surges. As a result, the input capacitor is frequently subject to voltage breakdown and shorting. The remaining shunt capacitor (C2) in the filter circuit is not subject to voltage surges because of the protection offered by the series filter resistor (R1). However, a shunt capacitor can become open, leaky, or shorted.

A shorted capacitor or an open filter resistor results in a no-output indication. An open filter resistor results in an abnormally high dc voltage at the input to the filter and no voltage at the output of the filter. Leaky capacitors or filter resistors that have lost their effectiveness, or filter resistors that have decreased in value, result in an excessive ripple amplitude in the output of the supply.

LC Capacitor-Input Filter

The LC capacitor-input filter is one of the most commonly used filters. This type of filter is used primarily in radio receivers, small audio amplifier power supplies, and in any type of power supply where the output current is low and the load current is relatively constant.

Figure 4-29 shows an LC capacitor-input filter and associated waveforms. Both half-wave and full-wave rectifier circuits are used to provide the input. The waveforms shown in view A of the figure represent the unfiltered output from a typical rectifier circuit. Note that the average value of output voltage (E_{avg}), indicated by the dashed lines, for the half-wave rectifier is less than half the amplitude of the voltage peaks. The average value of output voltage (E_{avg}) for the full-wave rectifier is greater than half, but is still much less than the peak amplitude of the rectifier-output waveform. With no filter connected across the output of the rectifier circuit (which results in unfiltered output voltage), the waveform has a large value of pulsating component (ripple) as compared to the average (or dc) component.

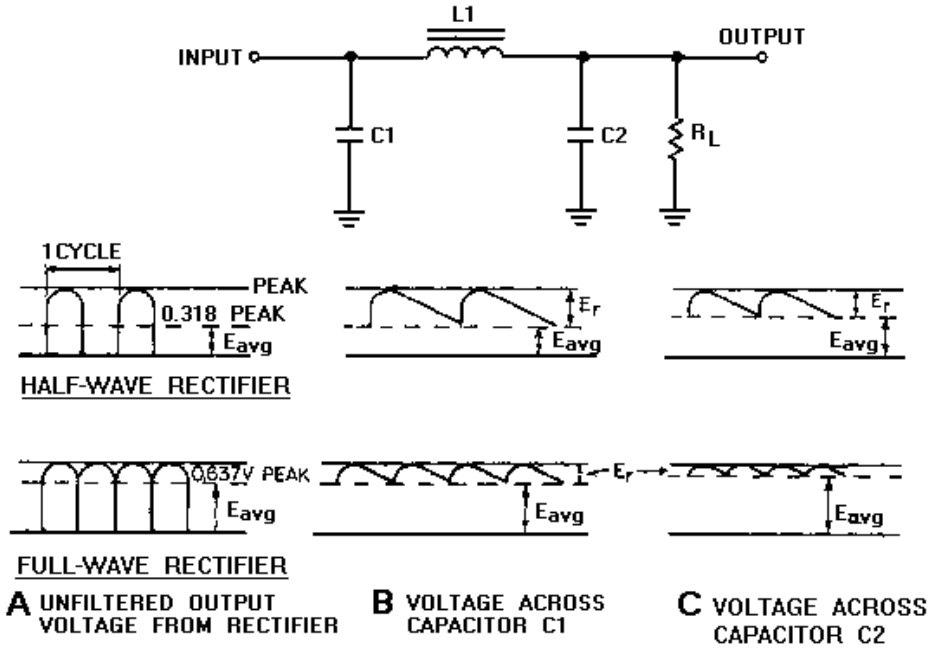

Figure 4-29.—LC filter and waveforms.

C1 reduces the ripple to a relatively low level (view B). L1 and C2 form the LC filter, which reduces the ripple even further. L1 is a large value iron-core induct (choke). L1 has a high value of inductance an therefore, a high value of X_L which offers a high reactance to the ripple frequency. At the same time, C2 offers a very low reactance to ac ripple. L1 and C2 for an ac voltage divider and, because the reactance of L1 much higher than that of C2, most of the ripple voltage is dropped across L1. Only a slight trace of ripple appears across C2 and the load (view C).

While the L1-C2 network greatly reduces ac ripple it has little effect on dc. You should recall that an inductor offers no reactance to dc. The only opposition to current flow is the resistance of the wire in the choke. Generally, this resistance is very low and the dc voltage drop across the coil is minimal. Thus, the LC filter overcomes the disadvantages of the RC filter.

Aside from the voltage divider effect, the inductor improves filtering in another way. You should recall that an inductor resists changes in the magnitude of the current flowing through it. Consequently, when the inductor is placed in series with the load, the inductor maintains steady current. In turn, this helps the voltage across the load remain constant when size of components is a factor.

The LC filter provides good filtering action over a wide range of currents. The capacitor filters best when the load is drawing little current. Thus, the capacitor discharges very slowly and the output voltage remains almost constant. On the other hand, the inductor filters best when the current is highest. The complementary nature of these two components ensures that good filtering will occur over a wide range of currents.

The LC filter has two disadvantages. First, it is more expensive than the RC filter because an iron-core choke costs more than a resistor. The second disadvantage is size. The iron-core choke is bulky and heavy, a fact which may render the LC filter unsuitable for many applications.

Q26. What is the most commonly used filter today?

Q27. What are the two main disadvantages of an LC capacitor filter?

FALURE ANALYSIS OF THE LC CAPACITOR-INPUT FILTER.—Shunt capacitors are subject to open circuits, short circuits, and excessive leakage; series inductors are subject to open windings and occasionally shorted turns or a short circuit to the core.

The input capacitor (C1) has the greatest pulsating voltage applied to it, is the most susceptible to voltage surges, and has a generally higher average voltage applied. As a result, the input capacitor is frequently subject to voltage breakdown and shorting. The output capacitor (C2) is not as susceptible to voltage surges because of the series protection offered by the series inductor (L1), but the capacitor can become open, leaky, or shorted.

A shorted capacitor, an open filter choke, or a choke winding which is shorted to the core, results in a no-output indication. A shorted capacitor, depending on the magnitude of the short, may cause a shorted rectifier, transformer, or filter choke, and may result in a blown fuse in the primary of the transformer. An open filter choke results in an abnormally high dc voltage at the input to the filter and no voltage at the output of the filter. A leaky or open capacitor in the filter circuit results in a low dc output voltage. This condition is generally accompanied by an excessive ripple amplitude. Shorted turns in the winding of a filter choke reduce the effective inductance of the choke and decrease its filtering efficiency. As a result, the ripple amplitude increases.

VOLTAGE REGULATION

Ideally, the output of most power supplies should be a constant voltage. Unfortunately, this is difficult to achieve. There are two factors that can cause the output voltage to change. First, the ac line voltage is not constant. The so-called 115 volts ac can vary from about 105 volts ac to 125 volts ac. This means that the peak ac voltage to which the rectifier responds can vary from about 148 volts to 177 volts. The ac line voltage alone can be responsible for nearly a 20 percent change in the dc output voltage. The second factor that can change the dc output voltage is a change in the load resistance. In complex electronic equipment, the load can change as circuits are switched in and out. In a television receiver, the load on a particular power supply may depend on the brightness of the screen, the control settings, or even the channel selected.

These variations in load resistance tend to change the applied dc voltage because the power supply has a fixed internal resistance. If the load resistance decreases, the internal resistance of the power supply drops more voltage. This causes a decrease in the voltage across the load.

Many circuits are designed to operate with a particular supply voltage. When the supply voltage changes, the operation of the circuit may be adversely affected. Consequently, some types of equipment must have power supplies that produce the same output voltage regardless of changes in the load resistance or changes in the ac line voltage. This constant output voltage may be achieved by adding a circuit called the VOLTAGE REGULATOR at the output of the filter. There are many different types of regulators in use today and to discuss all of them would be beyond the scope of this chapter.

LOAD REGULATION

A commonly used FIGURE OF MERIT for a power supply is its PERCENT OF REGULATION. The figure of merit gives us an indication of how much the output voltage changes over a range of load resistance values. The percent of regulation aids in the determination of the type of load regulation needed. Percent of regulation is determined by the equation:

$$\text{Percent of regulation} = \frac{(E_{nL} - E_{fL})}{E_{fL}} \times 100$$

This equation compares the change in output voltage at the two loading extremes to the voltage produced at full loading. For example, assume that a power supply produces 12 volts when the load current is zero. If the output voltage drops to 10 volts when full load current flows, then the percent of regulation is:

$$\text{Percent of regulation} = \frac{(E_{nL} - E_{fL})}{E_{fL}} \times 100$$

$$\text{Percent of regulation} = \frac{(12 - 10V)}{10V} \times 100$$

$$\text{Percent of regulation} = \frac{2V}{10V} \times 100$$

$$\text{Percent of regulation} = 20\%$$

Ideally, the output voltage should not change over the full range of operation. That is, a 12-volt power supply should produce 12 volts at no load, at full load, and at all points in between. In this case, the percent of regulation would be:

$$\text{Percent of regulation} = \frac{(E_{nL} - E_{fL})}{E_{fL}} \times 100$$

$$\text{Percent of regulation} = \frac{(12 - 12V)}{12V} \times 100$$

$$\text{Percent of regulation} = \frac{0V}{12V} \times 100$$

$$\text{Percent of regulation} = 0\%$$

Thus, zero-percent load regulation is the ideal situation. It means that the output voltage is constant under all load conditions. While you should strive for zero percent load regulation, in practical circuits you must settle for something less ideal. Even so, by using a voltage regulator, you can hold the percent of regulation to a very low value.

REGULATORS

You should know that the output of a power supply varies with changes in input voltage and circuit load current requirements. Because many electronic equipments require operating voltages and currents that must remain constant, some form of regulation is necessary. Circuits that maintain power supply voltages or current outputs within specified limits, or tolerances are called REGULATORS. They are designated as dc voltage or dc current regulators, depending on their specific application.

Voltage regulator circuits are additions to basic power supply circuits, which are made up of rectified and filter sections (figure 4-30). The purpose of the voltage regulator is to provide an output voltage with

little or no variation. Regulator circuits sense changes in output voltages and compensate for the changes. Regulators that maintain voltages within plus or minus (±) 0.1 percent are quite common.

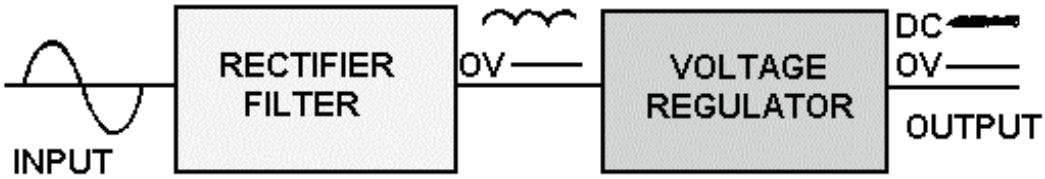

Figure 4-30.—Block diagram of a power supply and regulator.

Series and Shunt Voltage Regulators

There are two basic types of voltage regulators. Basic voltage regulators are classified as either SERIES or SHUNT, depending on the location or position of the regulating element(s) in relation to the circuit load resistance. Figure 4-31 (view A and view B) illustrates these two basic types of voltage regulators. In actual practice the circuitry of regulating devices may be quite complex. Broken lines have been used in the figure to highlight the differences between the series and shunt regulators.

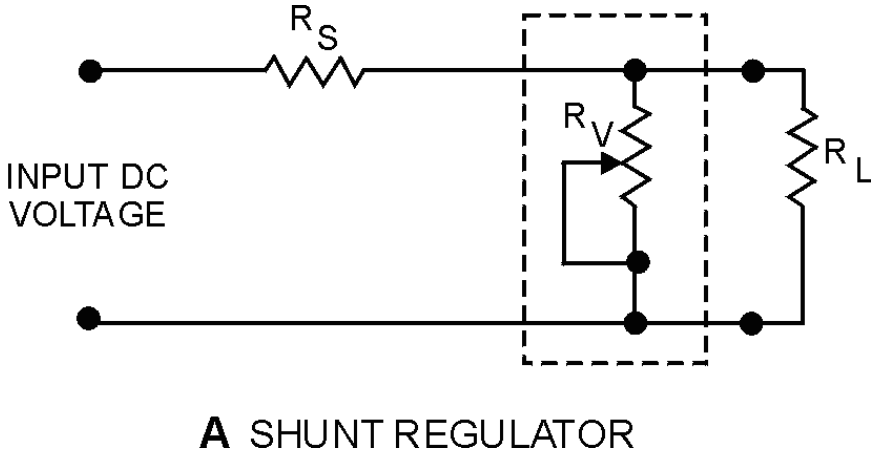

Figure 4-31A.—Simple series and shunt regulators. SHUNT REGULATOR.

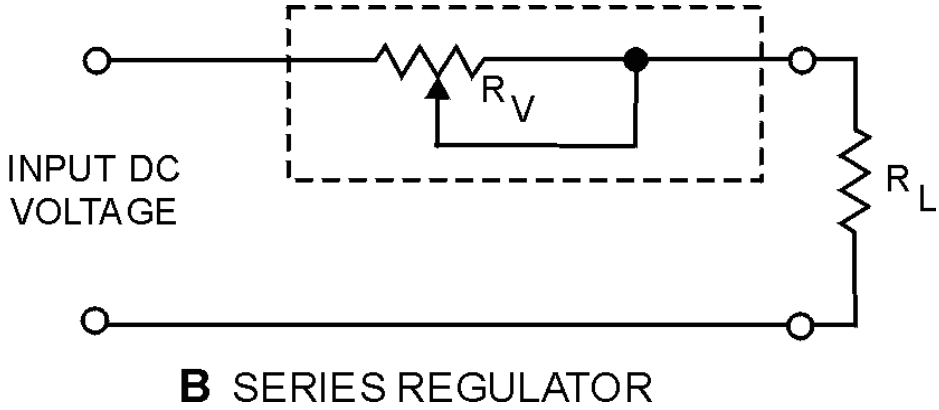

Figure 4-31B.—Simple series and shunt regulators. SERIES REGULATOR.

The schematic drawing in view A is that of a shunt-type regulator. It is called a shunt-type regulator because the regulating device is connected in parallel with the load resistance. The schematic drawing in view B is that of a series regulator. It is called a series regulator because the regulating device is connected in series with the load resistance. Figure 4-32 illustrates the principle of series voltage regulation. As you study the figure, notice that the regulator is in series with the load resistance (R_L) and that the fixed resistor (R_S) is in series with the load resistance.

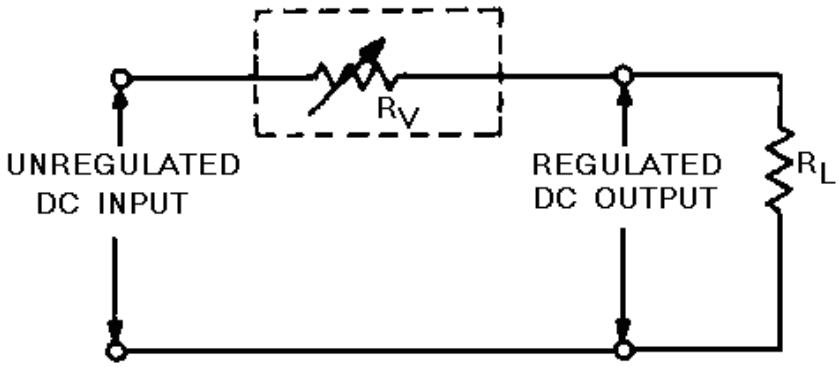

Figure 4-32.—Series voltage regulator.

You already know the voltage drop across a fixed resistor remains constant unless the current flowing through it varies (increases or decreases). In a shunt regulator, as shown in figure 4-33, output voltage regulation is determined by the current through the parallel resistance of the regulating device (R_V), the load resistance (R_L), and the series resistor (R_S). For now, assume that the circuit is operating under normal conditions, that the input is 120 volts dc, and that the desired regulated output is 100 volts dc. For a 100-volt output to be maintained, 20 volts must be dropped across the series resistor (R_S). If you assume that the value of R_S is 2 ohms, you must have 10 amperes of current through R_V and R_L. (Remember: E = IR.) If the values of the resistance of R_V and R_L are equal, 5 amperes of current will flow through each resistance (R_V and R_L).

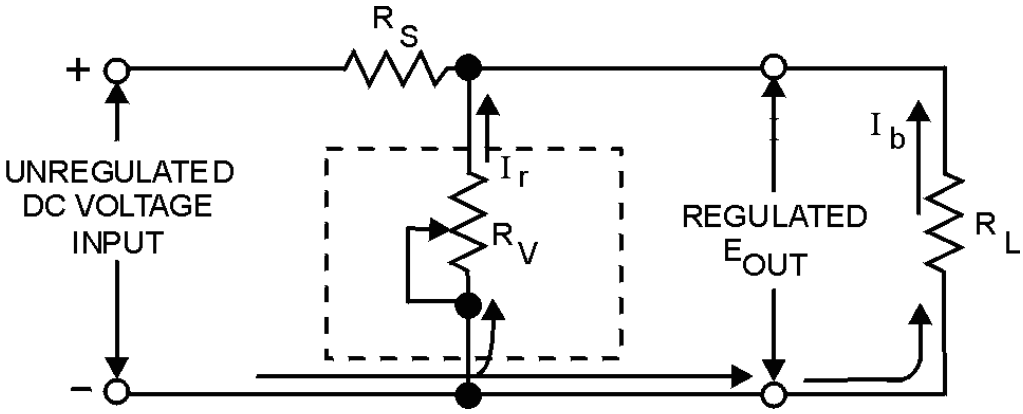

Figure 4-33.—Shunt voltage regulator.

Now, if the load resistance (R_L) increases, the current through R_L will decrease. For example, assume that the current through R_L is now 4 amperes and that the total current through R_S is 9 amperes. With this

drop in current, the voltage drop across R_S is 18 volts; consequently, the output of the regulator has increased to 102 volts. At this time, the regulating device (R_V) decreases in resistance, and 6 amperes of current flows through this resistance (R_V). Thus, the total current R_S is once again 10 amperes (6 amperes through R_V; 4 amperes through R_L). Therefore, 20 volts is dropped across R_S causing the output to decrease back to 100 volts. You should know by now that if the load resistance (R_L) increases, the regulating device (R_V) decreases its resistance to compensate for the change. If R_L decreases, the opposite effect occurs and R_V increases.

Now consider the circuit when a decrease in load resistance takes place. When R_L decreases, the current through R_L subsequently increases to 6 amperes. This action causes a total of 11 amperes to flow through R_S which then drops 22 volts. As a result, the output is 98 volts. However, the regulating device (R_V) senses this change and increases its resistance so that less current (4 amperes) flows through R_V. The total current again becomes 10 amperes, and the output is again 100 volts.

From these examples, you should now understand that the shunt regulator maintains the desired output voltage first by sensing the current change in the parallel resistance of the circuit and then by compensating for the change.

Again refer to the schematic shown in figure 4-33 and consider how the voltage regulator operates to compensate for changes in input voltages. You know, of course, that the input voltage may vary and that any variation must be compensated for by the regulating device. If an increase in input voltage occurs, the resistance of R_V automatically decreases to maintain the correct voltage division between R_V and R_S. You should see, therefore, that the regulator operates in the opposite way to compensate for a decrease in input voltage.

So far only voltage regulators that use variable resistors have been explained. However, this type of regulation has limitations. Obviously, the variable resistor cannot be adjusted rapidly enough to compensate for frequent fluctuations in voltages. Since input voltages fluctuate frequently and rapidly, the variable resistor is not a practical method for voltage regulation. A voltage regulator that operates continuously and automatically to regulate the output voltage without external manipulation is required for practical regulation.

Q28. Circuits which maintain constant voltage or current outputs are called dc voltage or dc current ___.

Q29. The purpose of a voltage regulator is to provide an output voltage with little or no ___.

Q30. The two basic types of voltage regulators are ___ and ___.

Q31. When a series voltage regulator is used to control output voltages, any increase in the input voltage results in an increase/a decrease (which one) in the resistance of the regulating device.

Q32. A shunt-type voltage regulator is connected in serial/parallel (which one) with the load resistance.

The schematic for a typical series voltage regulator is shown in figure 4-34. Notice that this regulator has a transistor (Q1) in the place of the variable resistor found in figure 4-32. Because the total load current passes through this transistor, it is sometimes called a "pass transistor." Other components which make up the circuit are the current limiting resistor (R1) and the Zener diode (CR1).

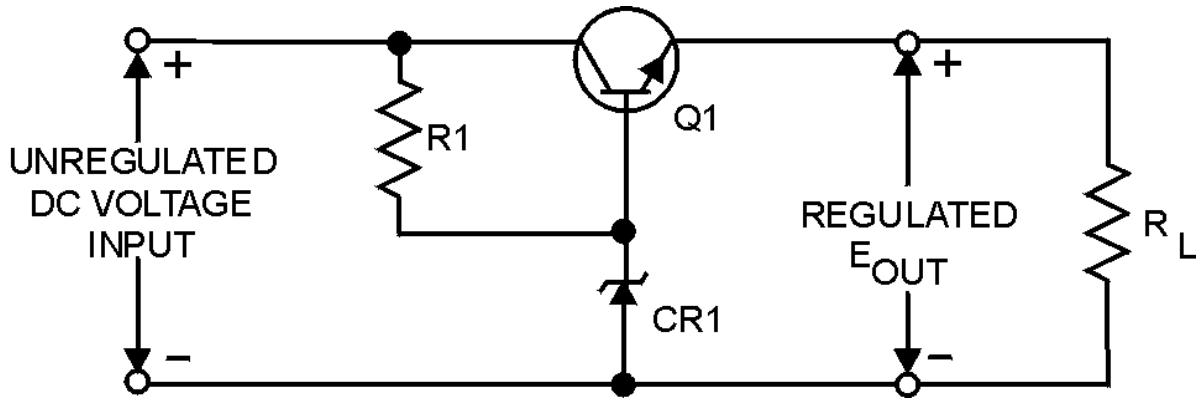

Figure 4-34.—Series voltage regulator.

Recall that a Zener diode is a diode that block current until a specified voltage is applied. Remember also that the applied voltage is called the breakdown, or Zener voltage. Zener diodes are available with different Zener voltages. When the Zener voltage is reached, the Zener diode conducts from its anode to its cathode (with the direction of the arrow).

In this voltage regulator, Q1 has a constant voltage applied to its base. This voltage is often called the reference voltage. As changes in the circuit output voltage occur, they are sensed at the emitter of Q1 producing a corresponding change in the forward bias of the transistor. In other words, Q1 compensates by increasing or decreasing its resistance in order to change the circuit voltage division.

Now, study figure 4-35. Voltages are shown to help you understand how the regulator operates. The Zener used in this regulator is a 15-volt Zener. In this instance the Zener or breakdown voltage is 15 volts. The Zener establishes the value of the base voltage for Q1. The output voltage will equal the Zener voltage minus a 0.7-volt drop across the forward biased base-emitter junction of Q1, or 14.3 volts. Because the output voltage is 14.3 volts, the voltage drop across Q1 must be 5.7 volts.

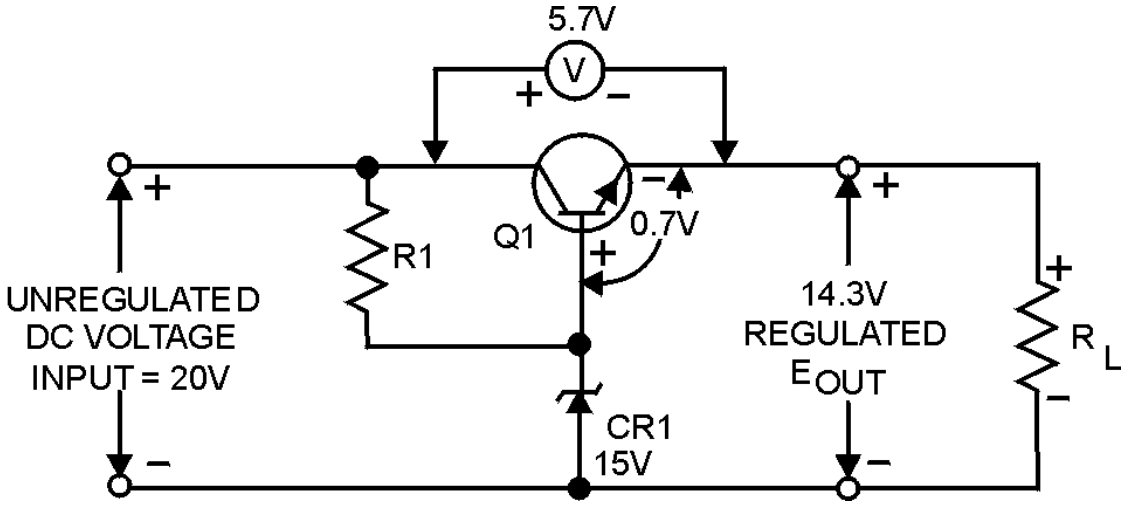

Figure 4-35.—Series voltage regulator (with voltages).

Study figure 4-36, view A, in order to understand what happens when the input voltage exceeds 20 volts. Notice the input and output voltages of 20.1 and 14.4 volts, respectively. The 14.4 output voltage is a momentary deviation, or variation, from the required regulated output voltage of 14.3 and is the result of a rise in the input voltage to 20.1 volts. Since the base voltage of Q1 is held at 15 volts by CR1, the

forward bias of Q1 changes to 0.6 volt. Because this bias voltage is less than the normal 0.7 volt, the resistance of Q1 increases, thereby increasing the voltage drop across the transistor to 5.8 volts. This voltage drop restores the output voltage to 14.3 volts. The entire cycle takes only a fraction of a second and, therefore, the change is not visible on an oscilloscope or readily measurable with other standard test equipment.

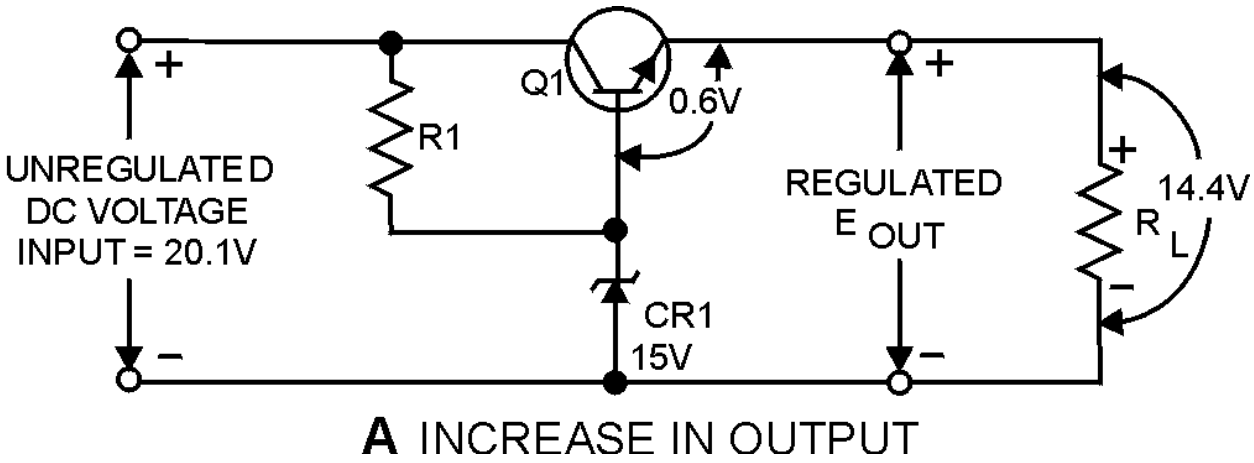

Figure 4-36A.—Series voltage regulator. INCREASE IN OUTPUT

View B is a schematic diagram for the same series voltage regulator with one significant difference. The output voltage is shown as 14.2 volts instead of the desired 14.3 volts. In this case, the load has increased causing a lowered voltage drop across R_L to 14.2 volts. When the output decreases, the forward bias of Q1 increases to 0.8 volt because Zener diode CR1 maintains the base voltage of Q1 at 15 volts. This 0.8 volt is the difference between the Zener reference voltage of 15 volts and the momentary output voltage. (15 V – 14.2 V = 0.8 V). At this point, the larger forward bias on Q1 causes the resistance of Q1 to decrease, thereby causing the voltage drop across Q1 to return to 5.7 volts. This then causes the output voltage to return to 14.3 volts.

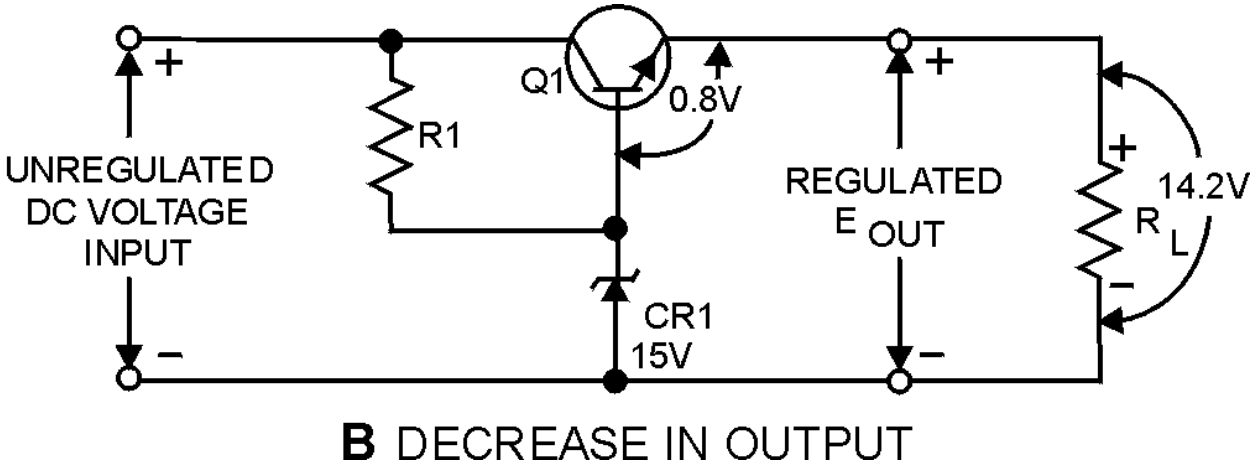

Figure 4-36B.—Series voltage regulator. DECREASE IN OUTPUT

The schematic shown in figure 4-37 is that of a shunt voltage regulator. Notice that Q1 is in parallel with the load. Components of this circuit are identical with those of the series voltage regulator except for the addition of fixed resistor R_S. As you study the schematic, you will see that this resistor is connected in series with the output load resistance. The current limiting resistor (R1) and Zener diode (CR1) provide a constant reference voltage for the base-collector junction of Q1. Notice that the bias of Q1 is determined by the voltage drop across R_S and R1. As you should know, the amount of forward bias across a transistor affects its total resistance. In this case, the voltage drop across R_S is the key to the total circuit operation.

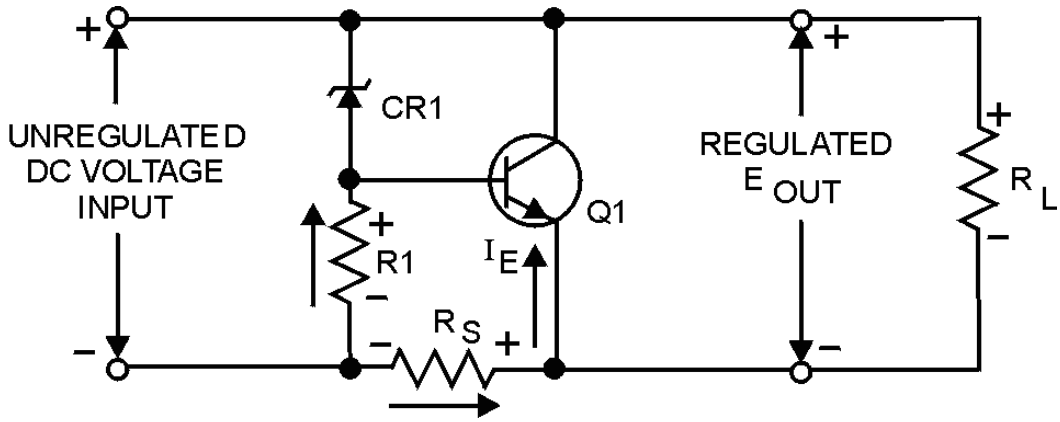

Figure 4-37.—Shunt voltage regulator.

Figure 4-38 is the schematic for a typical shunt-type regulator. Notice that the schematic is identical to the schematic shown in figure 4-37 except that voltages are shown to help you understand the functions of the various components. In the circuit shown, the voltage drop across the Zener diode (CR1) remains constant at 5.6 volts. This means that with a 20-volt input voltage, the voltage drop across R1 is 14.4 volts. With a base-emitter voltage of 0.7 volt, the output voltage is equal to the sum of the voltages across CR1 and the voltage at the base-emitter junction of Q1. In this example, with an output voltage of 6.3 volts and a 20-volt input voltage, the voltage drop across R_S equals 13.7 volts. Study the schematic to understand fully how these voltages are developed. Pay close attention to the voltages shown.

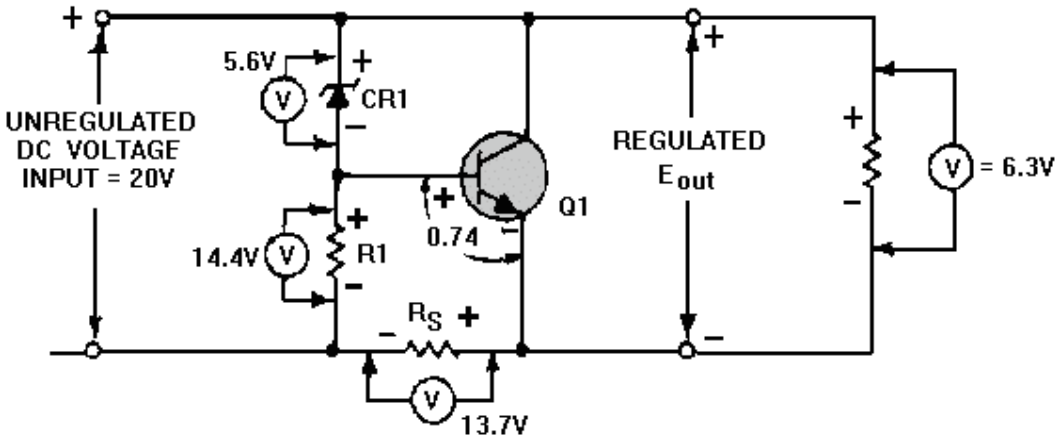

Figure 4-38.—Shunt voltage regulator (with voltages).

Now, refer to view A of figure 4-39. This figure shows the schematic diagram of the same shunt voltage regulator as that shown in figure 4-38 with an increased input voltage of 20.1 volts. This increases the forward bias on Q1 to 0.8 volt. Recall that the voltage drop across CR1 remains constant at 5.6 volts. Since the output voltage is composed of the Zener voltage and the base-emitter voltage, the output voltage momentarily increases to 6.4 volts. At this time, the increase in the forward bias of Q1 lowers the resistance of the transistor allowing more current to flow through it. Since this current must also pass through R_S, there is also an increase in the voltage drop across this resistor. The voltage drop across R_S is now 13.8 volts and therefore the output voltage is reduced to 6.3 volts. Remember, this change takes place in a fraction of a second.

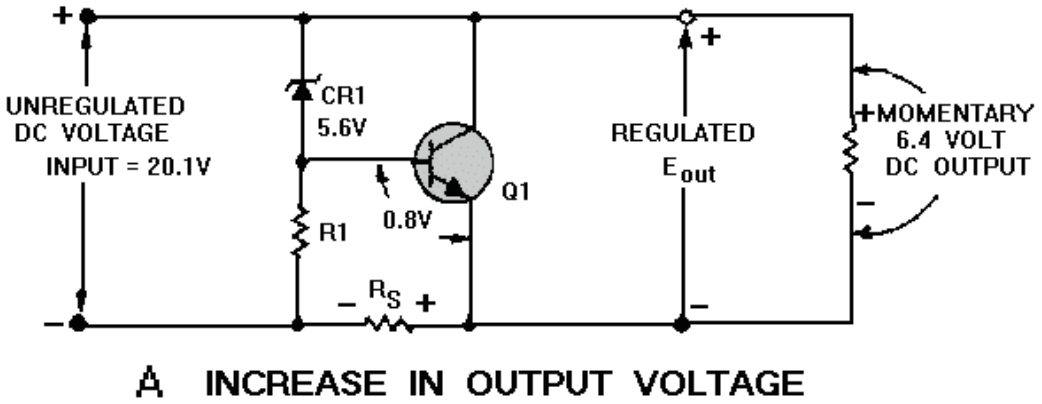

Figure 4-39A.—Shunt voltage regulator. INCREASE IN OUTPUT VOLTAGE

Study the schematic shown in view B. Although this schematic is identical to the other shunt voltage schematics previously illustrated and discussed, the output voltage is different. The load current has increased causing a <u>momentary</u> drop in voltage output to 6.2 volts. Recall that the circuit was designed to ensure a constant output voltage of 6.3 volts. Since the output voltage is less than that required, changes occur in the regulator to restore the output to 6.3 volts. Because of the 0.1 volt drop in the output voltage, the forward bias of Q1 is now 0.6 volt. This decrease in the forward bias increases the resistance of the transistor, thereby reducing the current flow through Q1 by the same amount that the load current increased. The current flow through R_S returns to its normal value and restores the output voltage to 6.3 volts.

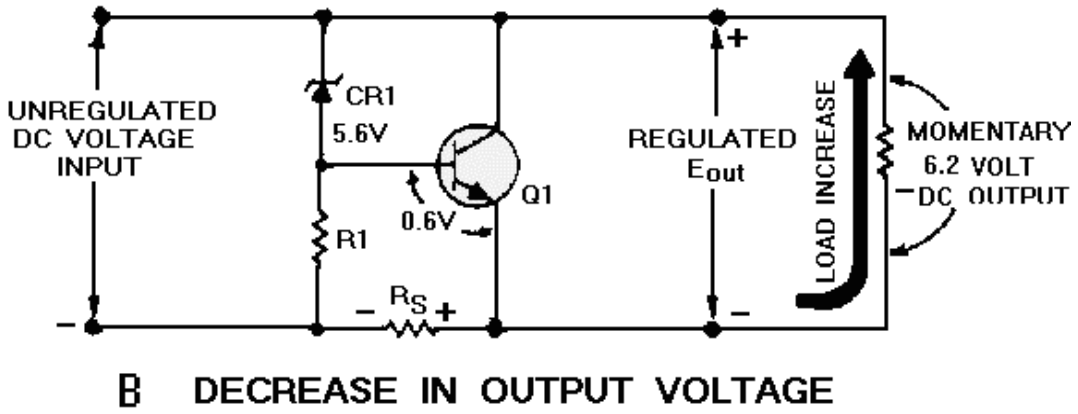

Figure 4-39B.—Shunt voltage regulator. DECREASE IN OUTPUT VOLTAGE

Q33. In figure 4-37, the voltage drop across R_S and R1 determines the amount of base-emitter ____ for Q1.

Q34. In figure 4-39, view A, when there is an increase in the input voltage, the forward bias of Q1 increases/decreases (which one).

Q35. In view B of figure 4-39, when the load current increases and the output voltage momentarily drops, the resistance of Q1 increase/decreases (which one) to compensate.

Current Regulators

You should now know how voltage regulators work to provide constant output voltages. In some circuits it may be necessary to regulate the current output. The circuitry which provides a constant current output is called a constant current regulator or just CURRENT REGULATOR. The schematic shown in figure 4-40 is a simplified schematic for a current regulator. The variable resistor shown on the schematic is used to illustrate the concept of current regulation. You should know from your study of voltage regulators that a variable resistor does not respond quickly enough to compensate for the changes. Notice that an ammeter has been included in this circuit to indicate that the circuit shown is that of a current regulator. When the circuit functions properly, the current reading of the ammeter remains constant. In this case the variable resistor (R_V) compensates for changes in the load or dc input voltage. Adequate current regulation results in the loss of voltage regulation. Studying the schematic shown, you should recall that any increase in load resistance causes a drop in current. To maintain a constant current flow, the resistance of R_V must be reduced whenever the load resistance increases. This causes the total resistance to remain constant. An increase in the input voltage must be compensated for by an increase in the resistance of R_V, thereby maintaining a constant current flow. The operation of a current regulator is similar to that of a voltage regulator. The basic difference is that one regulates current and the other regulates voltage.

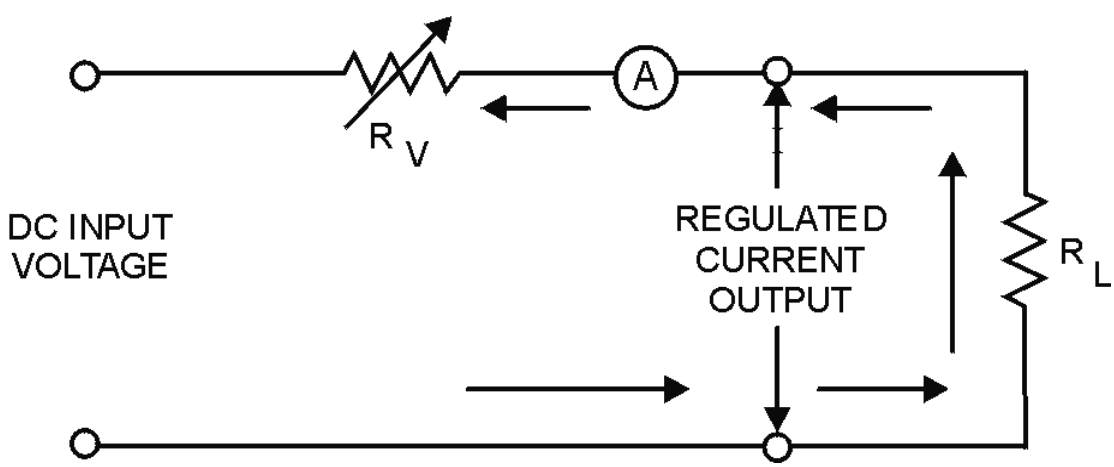

Figure 4-40.—Current regulator (simplified).

Since use of a variable resistor is not a practical way to control current fluctuation or variation, a transistor and a Zener diode, together with necessary resistors, are used. Recall that the Zener diode provides a constant reference voltage. The schematic shown in figure 4-41 is that of a current regulator circuit. Except for the addition of R1, the circuit shown in the figure is similar to that of a series voltage regulator. The resistor is connected in series with the load and senses any current changes in the load. Notice the voltage drop across R1 and the negative voltage polarity applied to the emitter of Q1. The

voltage polarity is a result of current flowing through R1, and this negative voltage opposes the forward bias for Q1. However, since the regulated voltage across CR1 has an opposite polarity, the actual bias of the transistor is the difference between the two voltages. You should see that the purpose of R2 is to function as a current-limiting resistor for the Zener diode.

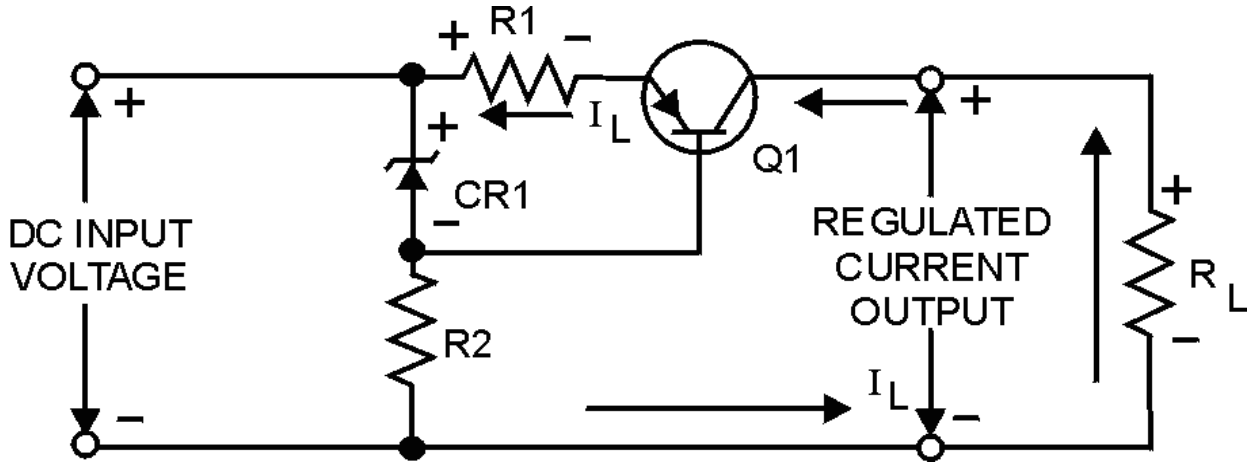

Figure 4-41.—Current regulator.

The purpose of a current regulator is to provide a constant current regardless of changes in the input voltage or load current. The schematic shown in figure 4-42 is that of a circuit designed to provide a constant current of 400 milliamperes. Voltmeters are shown in the schematic to emphasize the voltage drops across specific components. These voltages will help you understand how the current regulator operates. The voltage drop across the base-emitter junction of Q1 is 0.6 volt. This voltage is the difference between the Zener voltage and the voltage drop across R1. The 0.6-volt forward bias of Q1 permits proper operation of the transistor. The output voltage across R_L is 6 volts as shown by the voltmeter. With a regulated current output of 400 milliamperes, the transistor resistance (R_{Q1}) is 9 ohms. This can be proved by using Ohm's law and the values shown on the schematic. In this case, current (I) is equal to the voltage drop (E) divided by the resistance (R). Therefore: 12 volts divided by 30 ohms equals 0.4 ampere, or 400 milliamperes.

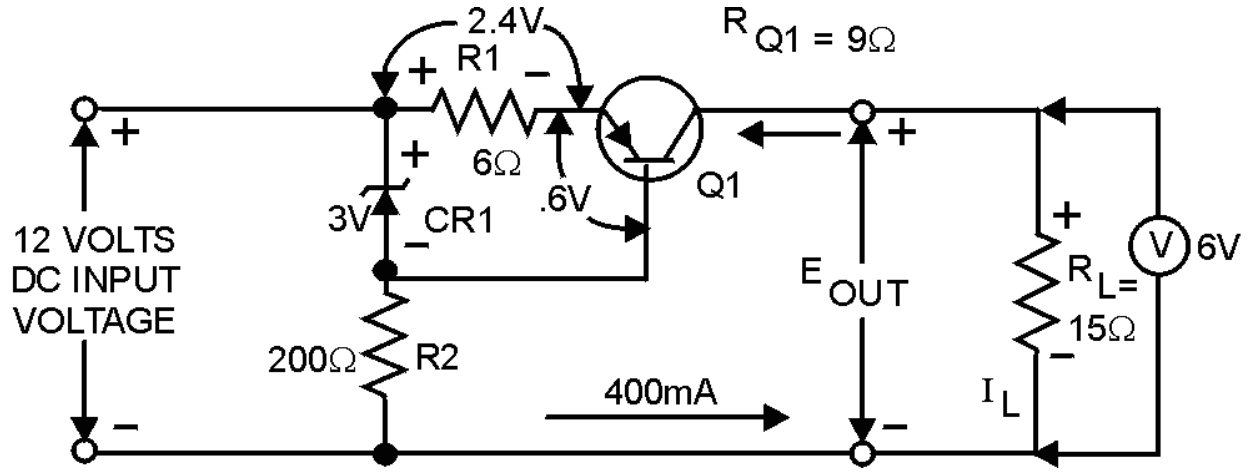

Figure 4-42.—Current regulator (with circuit values).

Since you are familiar with the basic current regulating circuitry, let's examine in detail how the various components work to maintain the constant 400-milliampere output. Refer to the schematic shown in figure 4-43. Remember a decrease in load resistance causes a corresponding increase in current flow. In the example shown, the load resistance R_L has dropped from 15 ohms to 10 ohms. This results in a larger voltage drop across R1 because of the increased current flow. The voltage drop has increased from 2.4 volts to 2.5 volts. Of course, the voltage drop across CR1 remains constant at 9 volts due to its regulating ability. Because of the increased voltage drop across R1, the forward bias on Q1 is now 0.5 volt. Since the forward bias of Q1 has decreased, the resistance of the transistor increases from 9 ohms to 14 ohms. Notice that the 5 ohm increase in resistance across the transistor corresponds to the 5 ohm decrease in the load resistance. Thus, the total resistance around the outside loop of the circuit remains constant. Since the circuit is a current regulator, you know that output voltages will vary as the regulator maintains a constant current output. In the figure, the voltage output is reduced to 4 volts, which is computed by multiplying current (I) times resistance (R) (400 mA × 10 ohms = 4 volts).

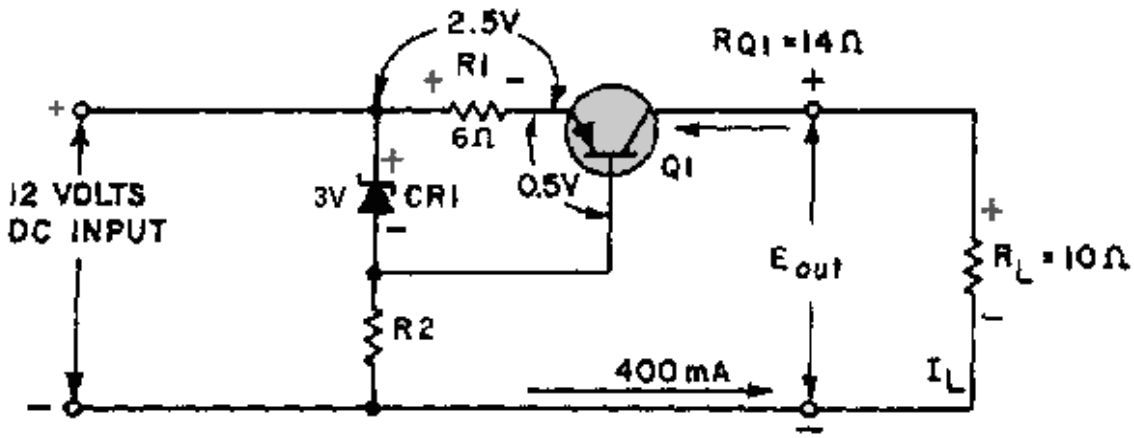

Figure 4-43.—Current regulator (with a decrease in R_L).

Q36. In figure 4-40, when there is an increase in the load resistance (R_L), the resistance of R_V <u>increases/decreases</u> (which one) to compensate for the change.

Q37. In figure 4-43 any decrease in the base-emitter forward bias across Q1 results in <u>an increase/a decrease</u> (which one) in the resistance of the transistor.

VOLTAGE MULTIPLIERS

You may already know how a transformer functions to increase or decrease voltages. You may also have learned that a transformer secondary may provide one or several ac voltage outputs which may be greater or less than the input voltage. When voltages are stepped up, current is decreased; when voltages are stepped down, current is increased.

Another method for increasing voltages is known as voltage multiplication. VOLTAGE MULTIPLIERS are used primarily to develop high voltages where low current is required. The most common application of the high voltage outputs of voltage multipliers is the anode of cathode-ray tubes (CRT), which are used for radar scope presentations, oscilloscope presentations, or TV picture tubes. The dc output of the voltage multiplier ranges from 1000 volts to 30,000 volts. The actual voltage depends upon the size of the CRT and its equipment application.

Voltage multipliers may also be used as primary power supplies where a 177 volt-ac input is rectified to pulsating dc. This dc output voltage may be increased (through use of a voltage multiplier) to as much as 1000 volts dc. This voltage is generally used as the plate or screen grid voltage for electron tubes.

If you have studied transformers, you may have learned that when voltage is stepped up, the output current decreases. This is also true of voltage multipliers. Although the measured output voltage of a voltage multiplier may be several times greater than the input voltage, once a load is connected the value of the output voltage decreases. Also any small fluctuation of load impedance causes a large fluctuation in the output voltage of the multiplier. For this reason, voltage multipliers are used only in special applications where the load is constant and has a high impedance or where input voltage stability is not critical.

Voltage multipliers may be classified as voltage doublers, triplers, or quadruplers. The classification depends on the ratio of the output voltage to the input voltage. For example, a voltage multiplier that increases the peak input voltage twice is called a voltage doubler. Voltage multipliers increase voltages through the use of series-aiding voltage sources. This can be compared to the connection of dry cells (batteries) in series.

The figures used in the explanation of voltage multipliers show a transformer input, even though for some applications a transformer is not necessary. The input could be directly from the power source or line voltage. This, of course, does not isolate the equipment from the line and creates a potentially hazardous condition. Most military equipments use transformers to minimize this hazard.

Figure 4-44 shows the schematic for a half-wave voltage doubler. Notice the similarities between this schematic and those of half-wave voltage rectifiers. In fact, the doubler shown is made up of two half-wave voltage rectifiers. C1 and CR1 make up one half-wave rectifier, and C2 and CR2 make up the other. The schematic of the first half-wave rectifier is indicated by the dark lines in view A of figure 4-45. The dotted lines and associated components represent the other half-wave rectifier and load resistor.

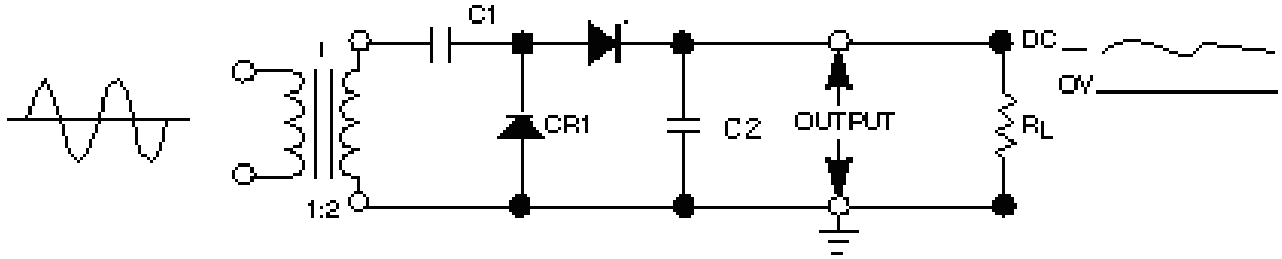

Figure 4-44.—Half-wave voltage doubler.

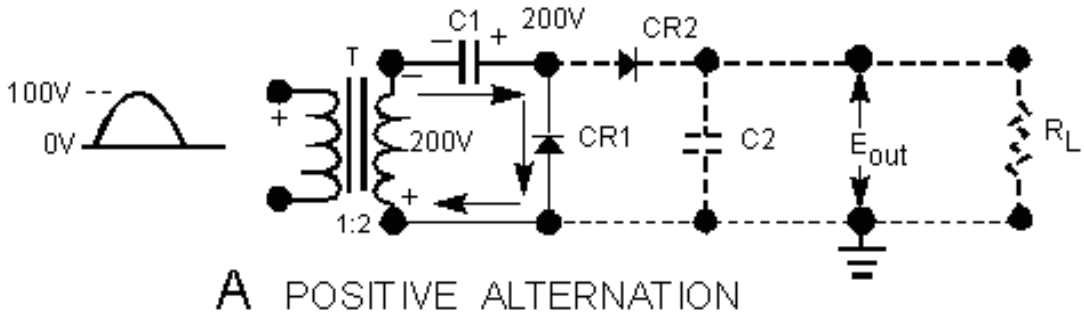

Figure 4-45A.—Rectifier action of CR1 and CR2. POSITIVE ALTERNATION

Notice that C1 and CR1 work exactly like a half-wave rectifier. During the positive alternation of the input cycle (view A), the polarity across the secondary winding of the transformer is as shown. Note that the top of the secondary is negative. At this time CR1 is forward biased (cathode negative in respect to the anode). This forward bias causes CR1 to function like a closed switch and allows current to follow the path indicated by the arrows. At this time, C1 charges to the peak value of the input voltage, or 200 volts, with the polarity shown.

During the period when the input cycle is negative, as shown in view B, the polarity across the secondary of the transformer is reversed. Note specifically that the top of the secondary winding is now positive. This condition now forward biases CR2 and reverse biases CR1. A series circuit now exists consisting of C1, CR2, C2, and the secondary of the transformer. The current flow is indicated by the arrows. The secondary voltage of the transformer now aids the voltage on C1. This results in a pulsating dc voltage of 400 volts, as shown by the waveform. The effect of series aiding is comparable to the connection of two 200-volt batteries in series. As shown in figure 4-46, C2 charges to the sum of these voltages, or 400 volts.

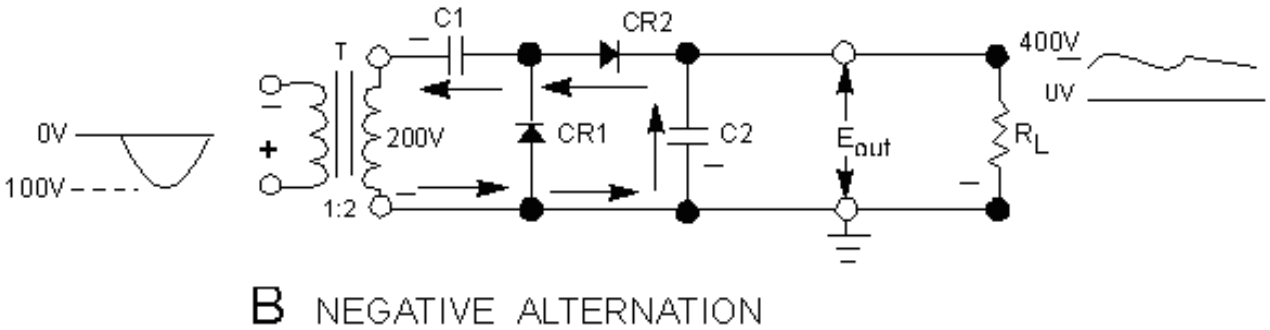

Figure 4-45B.—Rectifier action of CR1 and CR2. NEGATIVE ALTERNATION

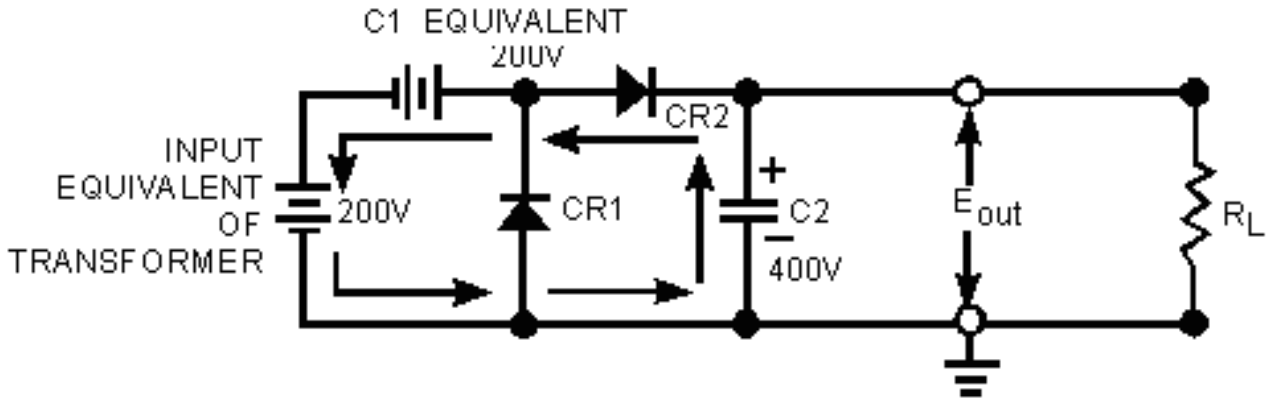

Figure 4-46.—Series-aiding sources.

The schematic shown in figure 4-47 is an illustration of a half-wave voltage tripler. When you compare figures 4-46 and 4-47, you should see that the circuitry is identical except for the additional parts, components, and circuitry shown by the dotted lines. (CR3, C3, and R2 make up the additional circuitry.) By themselves, CR3, C3, and R2 make up a half-wave rectifier. Of course, if you remove the added circuitry, you will once again have a half-wave voltage doubler.

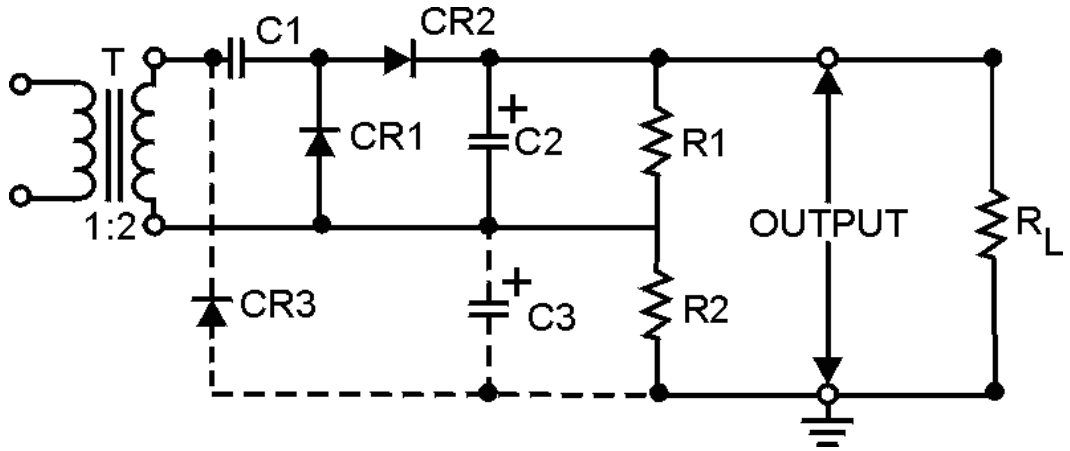

Figure 4-47.—Half-wave voltage tripler.

View A of figure 4-48 shows the schematic for the voltage tripler. Notice that CR3 is forward biased and functions like a closed switch. This allows C3 to charge to a peak voltage of 200 volts at the same time C1 is also charging to 200 volts.

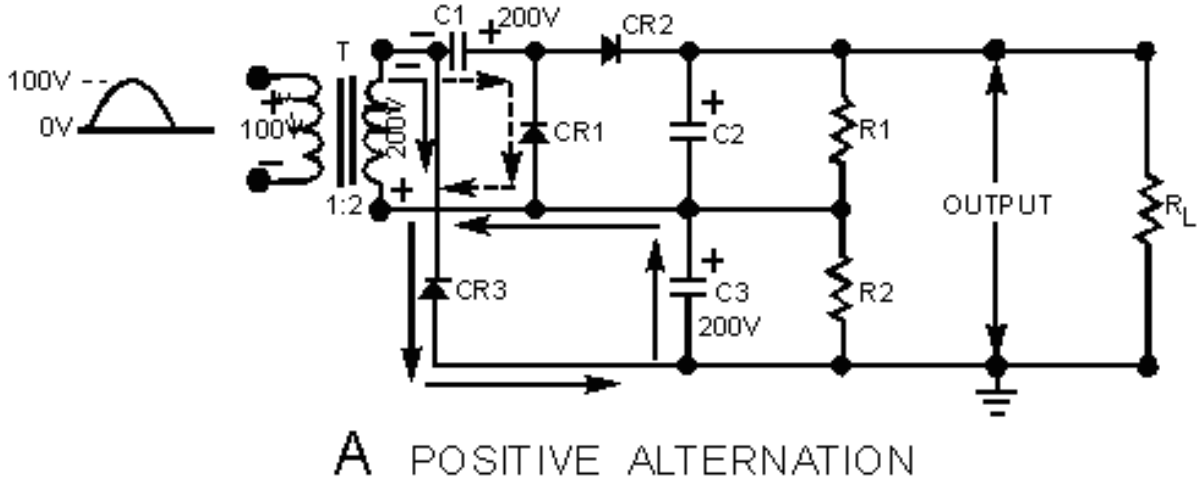

Figure 4-48A.—Voltage tripler. POSITIVE ALTERNATION

The other half of the input cycle is shown in view B. C2 is charged to twice the input voltage, or 400 volts, as a result of the voltage-doubling action of the transformer and C1. At this time, C2 and C3 are used as series-aiding devices, and the output voltage increases to the sum of their respective voltages, or 600 volts. R1 and R2 are proportional according to the voltages across C2 and C3. In this case, there is a 2 to 1 ratio.

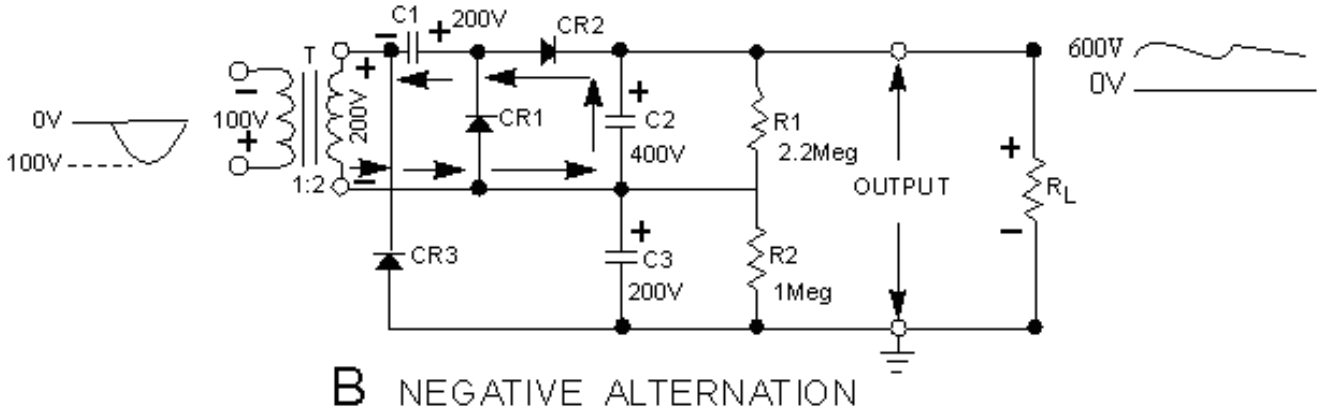

Figure 4-48B.—Voltage tripler. NEGATIVE ALTERNATION

The circuit shown in figure 4-49 is that of a full-wave voltage doubler. The main advantage of a full-wave doubler over a half-wave doubler is better voltage regulation, as a result of reduction in the output ripple amplitude and an increase in the ripple frequency. The circuit is, in fact, two half-wave rectifiers. These rectifiers function as series-aiding devices except in a slightly different way. During the alternation when the secondary of the transformer is positive at the top, C1 charges to 200 volts through CR1. Then, when the transformer secondary is negative at the top, C2 charges to 200 volts through CR2. R1 and R2 are equal value, balancing resistors that stabilize the charges of the two capacitors. Resistive load R_L is connected across C1 and C2 so that R_L receives the total charge of both capacitors. The output voltage is +400 volts when measured at the top of R_L, or point "A" with respect to point "B." If the output is measured at the bottom of R_L, it is –400 volts. Either way, the output is twice the peak value of the ac secondary voltage. As you can imagine, the possibilities for voltage multiplication are extensive.

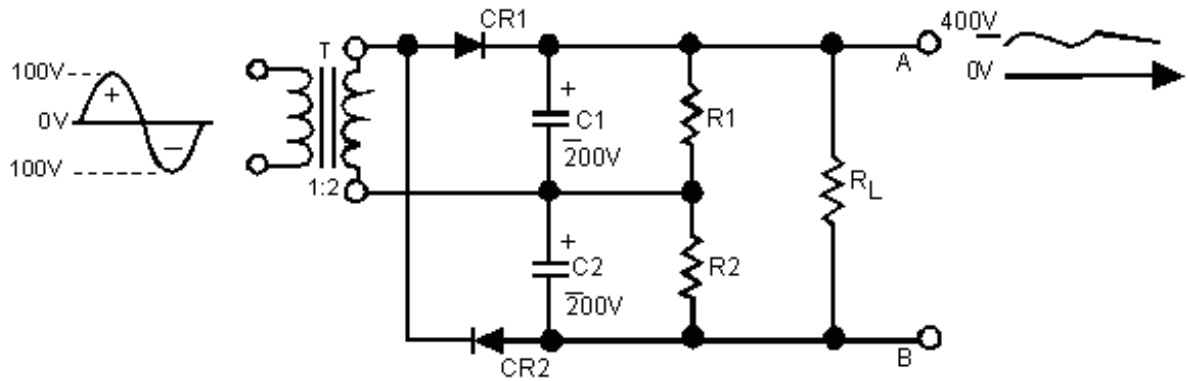

Figure 4-49.—Full-wave voltage doubler.

Q38. A half-wave voltage doubler is made up of how many half-wave rectifiers?

Q39. If a half-wave rectifier is added to a half-wave voltage doubler, the resulting circuit is a voltage ____.

Q40. In a full-wave voltage doubler, are the capacitors connected in series or in parallel with the output load?

Short Circuit Protection

The main disadvantage of a series regulator is that the pass transistor is in series with the load. If a short develops in the load, a large amount of current will flow in the regulator circuit. The pass transistor can be damaged by this excessive current flow. You could place a fuse in the circuit, but in many cases, the transistor will be damaged before the fuse blows. The best way to protect this circuit is to limit the current automatically to a safe value. A series regulator with a current-limiting circuit is shown in figure 4-50. You should recall that in order for a silicon NPN transistor to conduct, the base must be between 0.6 volt to 0.7 volt more positive than the emitter. Resistor R4 will develop a voltage drop of 0.6 volt when the load current reaches 600 milliamperes. This is illustrated using Ohm's law:

$$I = \frac{E}{R} = \frac{0.6\ volt}{1\ ohm} = .6 \text{ ampere or } 600 \text{ milliampere}$$

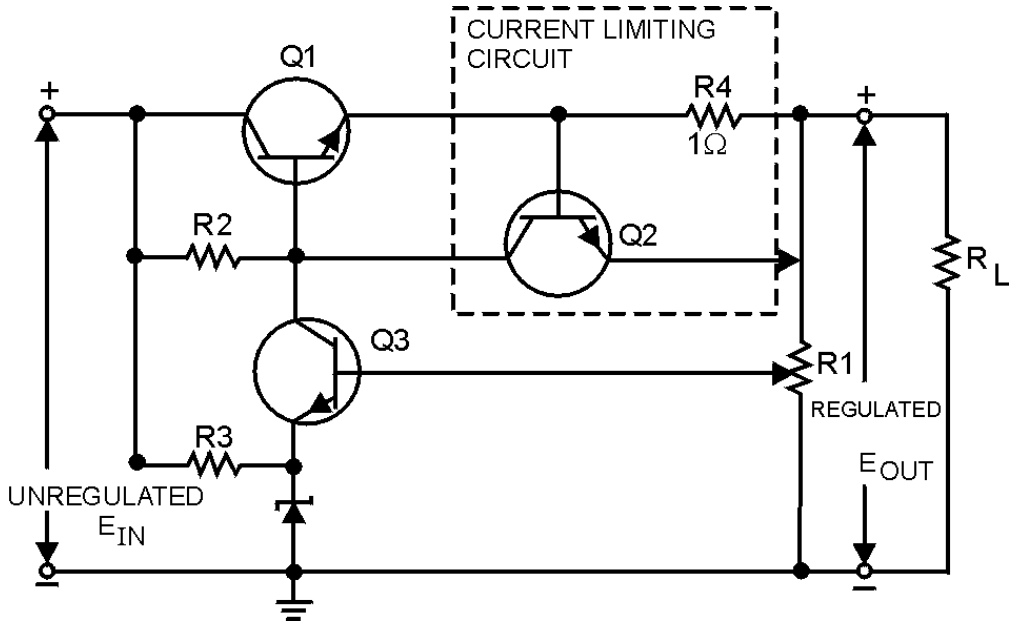

Figure 4-50.—Series regulator with current limiting.

When load current is below 600 milliamperes, the base-to-emitter voltage on Q2 is not high enough to allow Q2 to conduct. With Q2 cut off, the circuit acts like a series regulator.

When the load current increases above 600 milliamperes, the voltage drop across R4 increases to more than 0.6 volt. This causes Q2 to conduct through resistor R2, thereby decreasing the voltage on the base of pass transistor Q1. This action causes Q1 to conduct less. Therefore, the current cannot increase above 600 to 700 milliamperes.

By increasing the value of R4, you can limit the current to almost any value. For example, a 100-ohm resistor develops a voltage drop of 0.6 volt at 6 milliamperes of current. You may encounter current-limiting circuits that are more sophisticated, but the theory of operation is always the same. If you understand this circuit, you should have no problem with the others.

TROUBLESHOOTING POWER SUPPLIES

Whenever you are working with electricity, the proper use of safety precautions is of the utmost importance to remember. In the front of all electronic technical manuals, you will always find a section on safety precautions. Also posted on each piece of equipment should be a sign listing the specific precautions for that equipment. One area that is sometimes overlooked, and is a hazard especially on board ship, is the method in which equipment is grounded. By grounding the return side of the power transformer to the metal chassis, the load being supplied by the power supply can be wired directly to the metal chassis. Thereby the necessity of wiring directly to the return side of the transformer is eliminated. This method saves wire and reduces the cost of building the equipment, and while it solves one of the problems of the manufacturer, it creates a problem for you, the technician. Unless the chassis is physically grounded to the ship's ground (the hull), the chassis can be charged (or can float) several hundred volts above ship's ground. If you come in contact with the metal chassis at the same time you are in contact with the ship's hull, the current from the chassis can use your body as a low resistance path back to the ship's ac generators. At best this can be an unpleasant experience; at worst it can be fatal. For this reason Navy electronic equipment is always grounded to the ship's hull, and approved rubber mats are required

in all spaces where electronic equipment is present. Therefore, before starting to work on any electronic or electrical equipment, ALWAYS ENSURE THAT THE EQUIPMENT AND ANY TEST EQUIPMENT YOU ARE USING IS PROPERLY GROUNDED AND THAT THE RUBBER MAT YOU ARE STANDING ON IS IN GOOD CONDITION. As long as you follow these simple rules, you should be able to avoid the possibility of becoming an electrical conductor.

TESTING

There are two widely used checks in testing electronic equipment, VISUAL and SIGNAL TRACING. The importance of the visual check should not be underestimated because many technicians find defects right away simply by looking for them. A visual check does not take long. In fact, you should be able to see the problem readily if it is the type of problem that can be seen. You should learn the following procedure. You could find yourself using it quite often. This procedure is not only for power supplies but also for any type of electronic equipment you may be troubleshooting. (Because diode and transistor testing was covered in chapter 1 and 2 of this module, it will not be discussed at this time. If you have problems in this area, refer to chapter 1 for diodes or chapter 2 for transistors.)

1. BEFORE YOU ENERGIZE THE EQUIPMENT, LOOK FOR:

   a. SHORTS—Any terminal or connection that is close to the chassis or to any other terminal should be examined for the possibility of a short. A short in any part of the power supply can cause considerable damage. Look for and remove any stray drops of solder, bits of wire, nuts, or screws. It sometimes helps to shake the chassis and listen for any tell-tale rattles. Remember to correct any problem that may cause a short circuit; if it is not causing trouble now, it may cause problems in the future.

   b. DISCOLORED OR LEAKING TRANSFORMER—This is a sure sign that there is a short somewhere. Locate it. If the equipment has a fuse, find out why the fuse did not blow; too large a size may have been installed, or there may be a short across the fuse holder.

   c. LOOSE, BROKEN, OR CORRODED CONNECTION—Any connection that is not in good condition is a trouble spot. If it is not causing trouble now, it will probably cause problems in the future. Fix it.

   d. DAMAGED RESISTORS OR CAPACITORS—A resistor that is discolored or charred has been subjected to an overload. An electrolytic capacitor will show a whitish deposit at the seal around the terminals. Check for a short whenever you notice a damaged resistor or a damaged capacitor. If there is no short, the trouble may be that the power supply has been overloaded in some way. Make a note to replace the part after signal tracing. There is no sense in risking a new part until the trouble has been located.

2. ENERGIZE THE EQUIPMENT AND LOOK FOR:

   a. SMOKING PARTS—If any part smokes or if you hear any boiling or sputtering sounds, remove the power immediately. There is a short circuit somewhere that you have missed in your first inspection. Use any ohmmeter to check the part once again. Start in the neighborhood of the smoking part.

   b. SPARKING—Tap or shake the chassis. If you see or hear sparking, you have located a loose connection or a short. Check and repair.

If you locate and repair any of the defects listed under the visual check, make a note of what you find and what you do to correct it. It is quite probable you have found the trouble. However, a good technician

takes nothing for granted. You must prove to yourself that the equipment is operating properly and that no other troubles exist.

If you find none of the defects listed under the visual check, go ahead with the signal tracing procedure. The trouble is probably of such a nature that it cannot be seen directly-it may only be seen using an oscilloscope.

Tracing the ac signal through the equipment is the most rapid and accurate method of locating a trouble that cannot be found by a visual check, and it also serves as check on any repairs you may have made. The idea is to trace the ac voltage from the transformer, to see it change to pulsating dc at the rectifier output, and then see the pulsations smoothed out by the filter. The point where the signal stops or becomes distorted is the place look for the trouble. If you have no dc output voltage, you should look for an open or a short in your signal tracing. If you have a low dc voltage, you should look for a defective part and keep your eyes open for the place where the signal becomes distorted.

Signal tracing is one method used to localize trouble in a circuit. This is done by observing the waveform at the input and output of each part of a circuit.

Let's review what each part of a good power supply does to a signal, as shown in figure 4-51. The ac voltage is brought in from the power line by means of the line cord. This voltage is connected to the primary of the transformer through the ON-OFF switch (S1). At the secondary winding of the transformer (points 1 and 2), the scope shows you a picture of the stepped-up voltage developed across each half of the secondary winding-the picture is that of a complete sine wave. Each of the two stepped-up voltages is connected between ground and one of the two anodes of the rectifier diodes. At the two rectifier anodes (points 4 and 5), there is still no change in the shape of the stepped-up voltage-the scope picture still shows a complete sine wave.

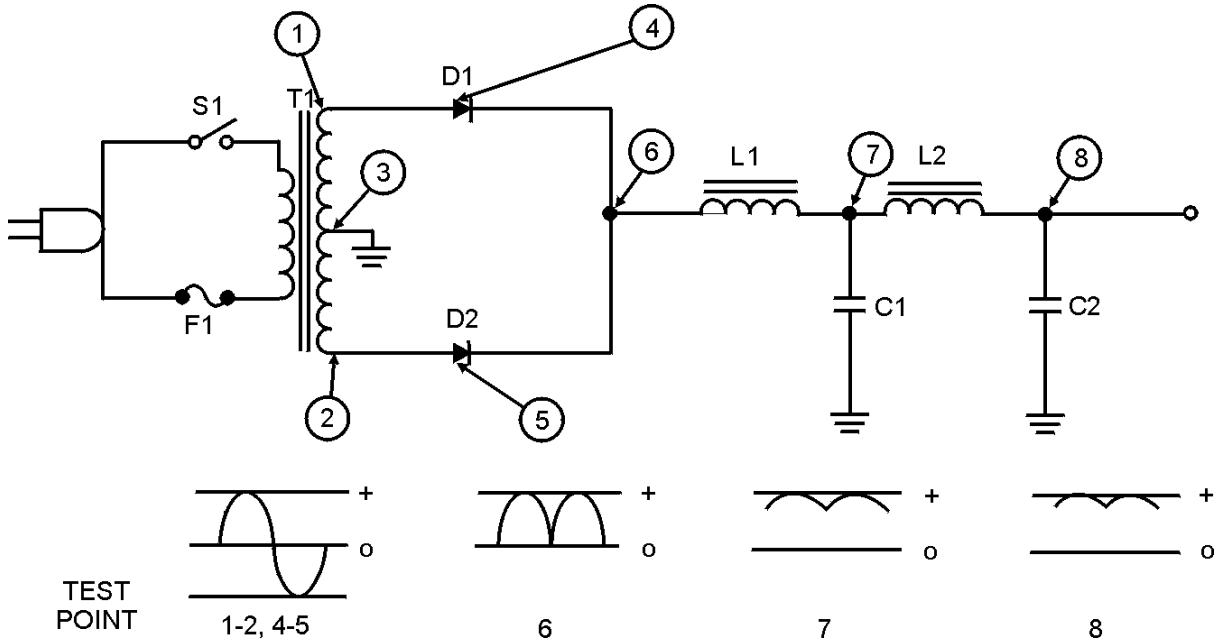

Figure 4-51.—Complete power supply (without regulator).

However, when you look at the scope pattern for point 6 (the voltage at the rectifier cathodes), you see the waveshape for pulsating direct current. This pulsating dc is fed through the first choke (L1) and filter capacitor (C1) which remove a large part of the ripple, or "hum," as shown by the waveform for point 7. Finally the dc voltage is fed through the second choke (L2) and filter capacitor (C2), which

remove nearly all of the remaining ripple. (See the waveform for point 8, which shows almost no visible ripple.) You now have almost pure dc.

No matter what power supplies you use in the future, they all do the same thing—they change ac voltage into dc voltage.

Component Problems

The following paragraphs will give you an indication of troubles that occur with many different electronic circuit components.

TRANSFORMER AND CHOKE TROUBLES.—As you should know by now, the transformer and the choke are quite similar in construction. Likewise, the basic troubles that they may develop are comparable.

1. A winding can open.
2. Two or more turns of one winding can short together.
3. A winding can short to the casing, which is usually grounded.
4. Two windings (primary and secondary) can short together. This trouble is possible, of course, only in transformers.

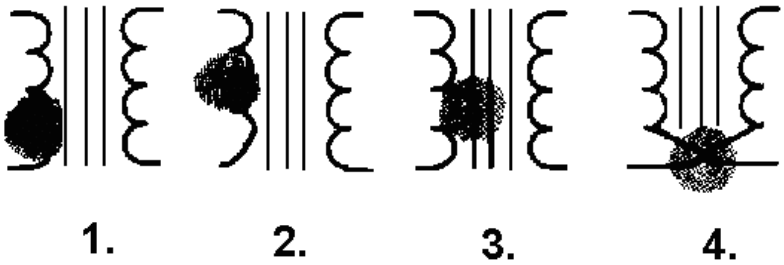

When you have decided which of these four possible troubles could be causing the symptoms, you have definite steps to take. If you surmise that there is an open winding, or windings shorted together or to ground, an ohmmeter continuity check will locate the trouble. If the turns of a winding are shorted together, you may not be able to detect a difference in winding resistance. Therefore, you need to connect a good transformer in the place of the old one and see if the symptoms are eliminated. Keep in mind that transformers are difficult to replace. Make absolutely sure that the trouble is not elsewhere in the circuit before you change the transformer.

Occasionally, the shorts will only appear when the operating voltages are applied to the transformer. In this case you might find the trouble with a megger-an instrument which applies a high voltage as it reads resistance.

CAPACITOR AND RESISTOR TROUBLES.—Just two things can happen to a capacitor:

1. It may open up, removing the capacitor completely from the circuit.
2. It may develop an internal short circuit. This means that it begins to pass current as though it were a resistor or a direct short.

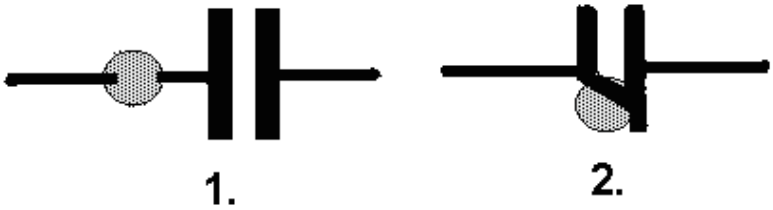

You may check a capacitor suspected of being open by disconnecting it from the circuit and checking it with a capacitor analyzer. You can check a capacitor suspected of being leaky with an ohmmeter; if it reads less than 500 kilohms, it is more than likely bad. However, capacitor troubles are difficult to find since they may appear intermittently or only under operating voltages. Therefore, the best check for a faulty capacitor is to replace it with one known to be good. If this restores proper operation, the fault was in the capacitor.

Resistor troubles are the simplest. However, like the others, they must be considered.

1. A resistor can open.
2. A resistor can increase in value.
3. A resistor can decrease in value.

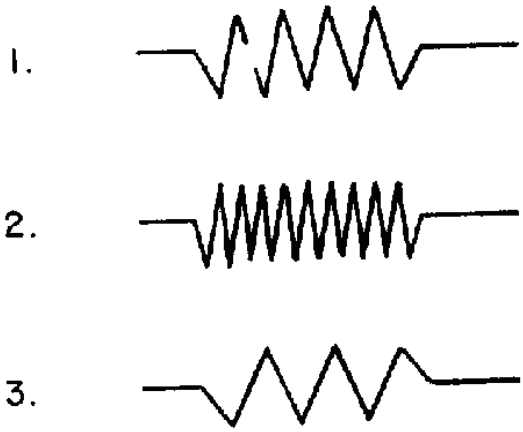

You already know how to check possible resistor troubles. Just use an ohmmeter after making sure no parallel circuit is connected across the resistor you wish to measure. When you know a parallel circuit is connected across the resistor or when you are in doubt disconnect one end of the resistor before measuring it. The ohmmeter check will usually be adequate. However, never forget that occasionally intermittent troubles may develop in resistors as well as in any other electronic parts.

Although you may observe problems that have not been covered specifically in this chapter, you should have gained enough knowledge to localize and repair any problem that may occur.

Q41. What is the most important thing to remember when troubleshooting?

Q42. What is the main reason for grounding the return side of the transformer to the chassis?

Q43. What are two types of checks used in troubleshooting power supplies?

SUMMARY

This chapter has presented you with a basic description of the theory and operation of a basic power supply and its components. The following summary is provided to enhance your understanding of power supplies.

POWER SUPPLIES are electronic circuits designed to convert ac to dc at any desired level. Almost all power supplies are composed of four sections: transformer, rectifier, filter, and regulator.

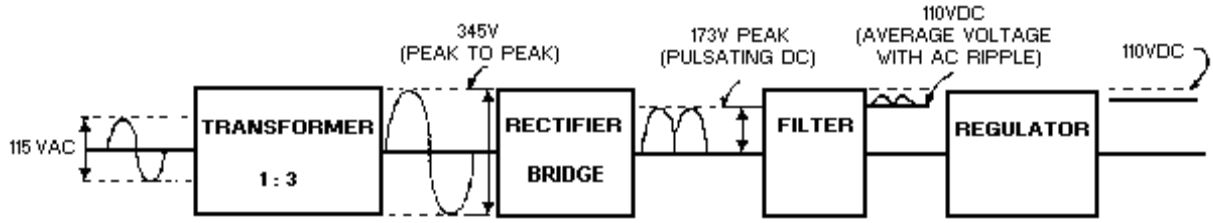

B

The **POWER TRANSFORMER** is the input transformer for the power supply.

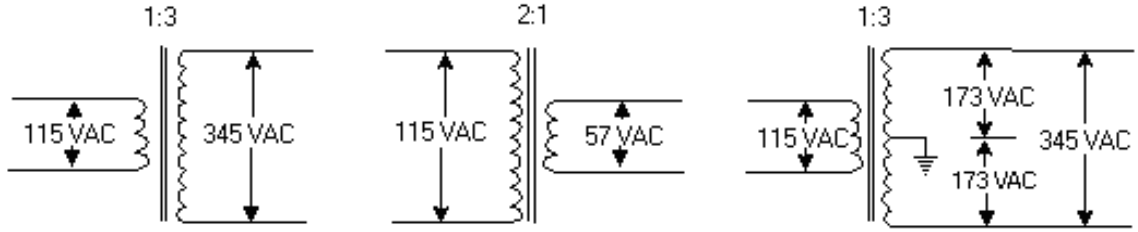

The **RECTIFIER** is the section of the power supply that contains the secondary windings of the power transformer and the rectifier circuit. The rectifier uses the ability of a diode to conduct during one half cycle of ac to convert ac to dc.

HALF-WAVE RECTIFIERS give an output on only one half cycle of the input ac. For this reason, the pulses of dc are separated by a period of one half cycle of zero potential voltage.

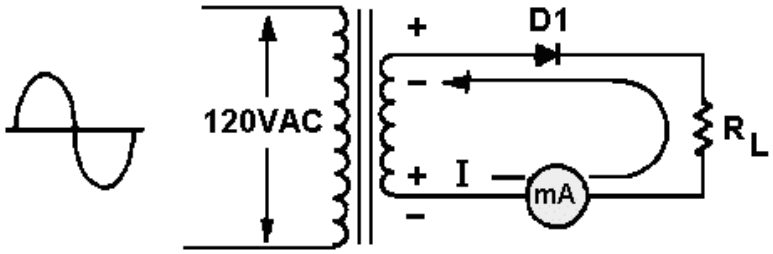

FULL-WAVE RECTIFIERS conduct on both halves of the input ac cycles. As a result, the dc pulses are not separated from each other. A characteristic of full-wave rectifiers is the use of a

center-tapped, high-voltage secondary. Because of the center tap, the output of the rectifier is limited to one-half of the input voltage of the high-voltage secondary.

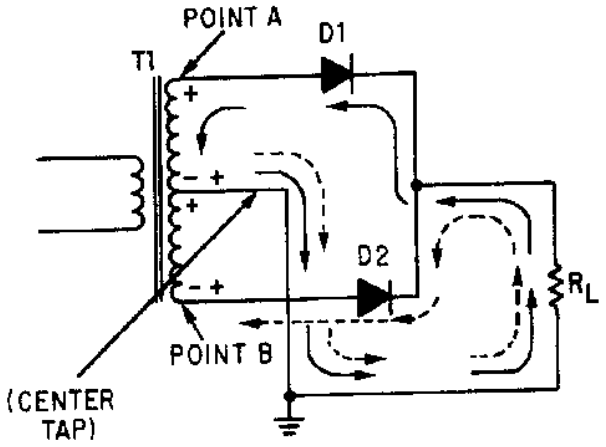

BRIDGE RECTIFIERS are full-wave rectifiers that do not use a center-tapped, high-voltage secondary. Because of this, their dc output voltage is equal to the input voltage from the high-voltage secondary of the power transformer. Bridge rectifiers use four diodes connected in a bridge network. Diodes conduct in diagonal pairs to give a full-wave pulsating dc output.

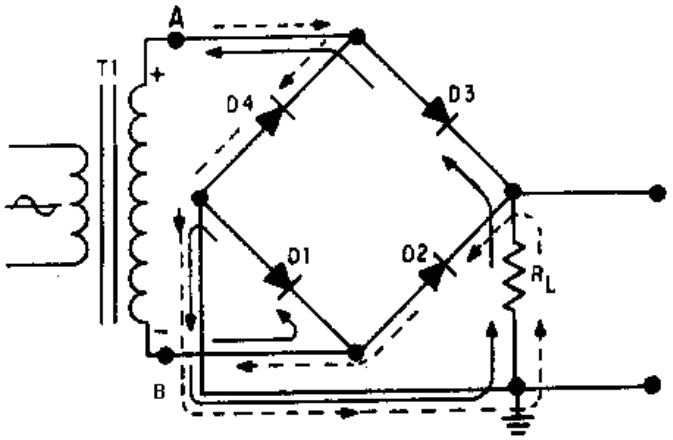

FILTER CIRCUITS are designed to smooth, or filter, the ripple voltage present on the pulsating dc output of the rectifier. This is done by an electrical device that has the ability to store energy and to release the stored energy.

CAPACITANCE FILTERS are nothing more than large capacitors placed across the output of the rectifier section. Because of the large size of the capacitors, fast charge paths, and slow discharge paths, the capacitor will charge to average value, which will keep the pulsating dc output from reaching zero volts.

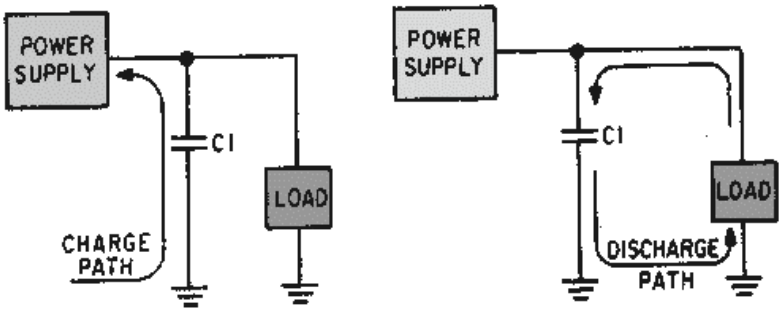

INDUCTOR FILTERS use an inductor called a choke to filter the pulsating dc input. Because of the impedance offered to circuit current, the output of the filter is at a lower amplitude than the input.

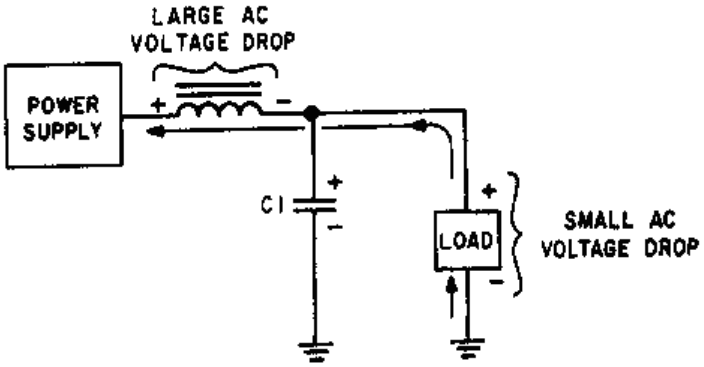

PI-TYPE FILTERS use both capacitive and inductive filters connected in a pi-type configuration. By combining filtering devices, the ability of the pi filter to remove ripple voltage is superior to that of either the capacitance or inductance filter.

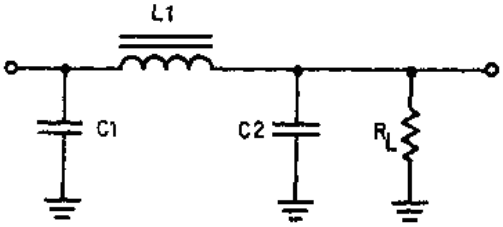

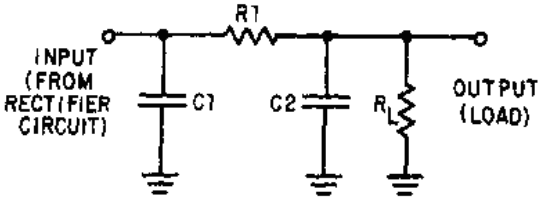

VOLTAGE REGULATORS are circuits designed to maintain the output of power supplies at a constant amplitude despite variations of the ac source voltage or changes of the resistance of the load.

This is done by creating a voltage divider of a resistive element in the regulator and the resistance of the load. Regulation is achieved by varying the resistance of the resistive element in the regulator.

A **SERIES REGULATOR** uses a variable resistance in series with the load. Regulation is achieved by varying this resistance either to increase or to decrease the voltage drop across the resistive element of the regulator. Characteristically, the resistance of the variable resistance moves in the same direction as the load. When the resistance of the load increases, the variable resistance of the regulator increases; when load resistance decreases, the variable resistance of the regulator decreases.

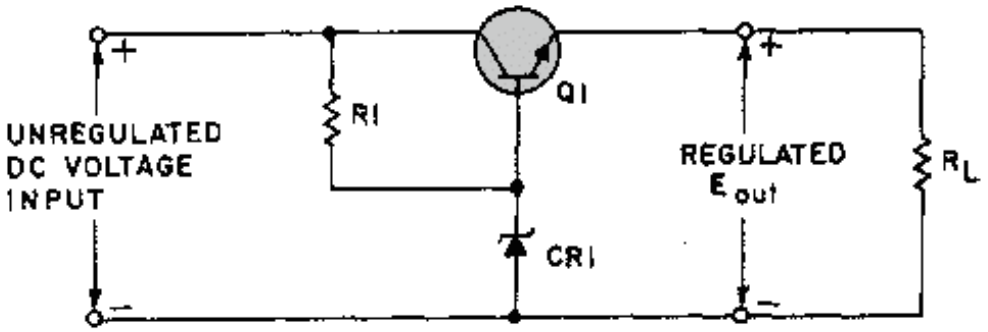

SHUNT REGULATORS use a variable resistance placed in parallel with the load. Regulation is achieved by keeping the resistance of the load constant. Characteristically the resistance of the shunt moves in the opposite direction of the resistance of the load.

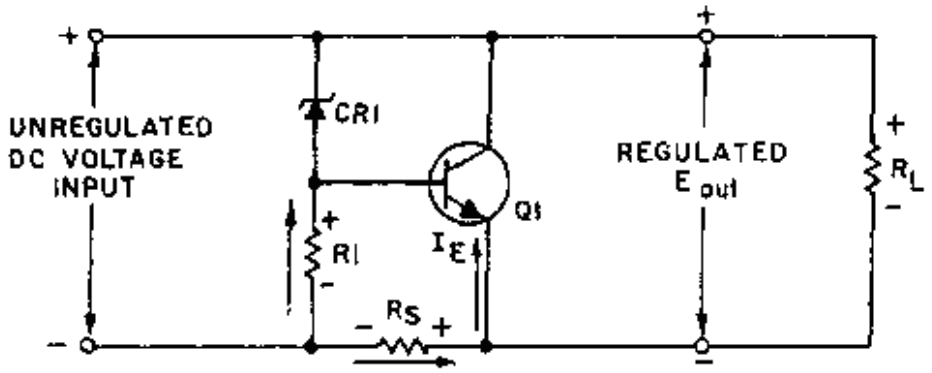

The **CURRENT LIMITER** is a short-circuit protection device that automatically limits the current to a safe value. This is done when the current-limiting transistor senses an increase in load current. At this time the current-limiting transistor decreases the voltage on the base of the pass transistor in the regulator, causing a decrease in its conduction. Therefore, current cannot rise above a safe value.

TROUBLESHOOTING is a method of detecting and repairing problems in electronic equipment. Two methods commonly used are the **VISUAL CHECK** and **SIGNAL TRACING**. The visual check allows the technician to make a quick check of component problems, such as shorts, discolored or leaky transformers, loose or broken connections, damaged resistors or capacitors, smoking parts, or sparking. The signal tracing method is used when the technician cannot readily see the problem and needs to use test equipment. Component failure is also important in troubleshooting. In transformers and chokes, a winding can open, or two or more windings can short, either to themselves or to the case that is usually grounded. In a capacitor only two things can occur: either it can short and act as a resistor, or it can open, removing it from the circuit. A resistor can open, increase in value, or decrease in value.

ANSWERS TO QUESTIONS Q1. THROUGH Q43.

A1. Transformer, rectifier, filter, regulator.

A2. To change ac to pulsating dc.

A3. To change pulsating dc to pure dc.

A4. To maintain a constant voltage to the load.

A5. The half-wave rectifier.

A6. 15.9 volts.

A7. It isolates the chassis from the power line.

A8. The fact that the full-wave rectifier uses the full output, both half cycles, of the transformer.

A9. 120 hertz.

A10. 63.7 volts.

A11. Peak voltage is half that of the half-wave rectifier.

A12. The bridge rectifier can produce twice the voltage with the same size transformer.

A13. It will decrease. Capacitance is inversely proportional to:

X_C ($X_C = \frac{1}{2\pi fC}$).

A14. The capacitor filter.

A15. Parallel.

A16. At a high frequency.

A17. A filter circuit increases the average output voltage.

A18. Value of capacitance and load resistance.

A19. Good.

A20. Yes.

A21. The CEMF of the inductor.

A22. From 1 to 20 henries.

A23. Decrease.

A24. Expense.

A25. When ripple must be held at an absolute minimum.

A26. LC capacitor-input filter.

A27. Cost and size of the inductor.

A28. Regulators.

A29. Variation.

A30. Series and shunt.

A31. An increase.

A32. In parallel.

A33. Bias.

A34. Increases.

A35. Increases.

A36. Decreases.

A37. An increase.

A38. Two.

A39. Trippler.

A40. In parallel.

A41. Safety precautions.

A42. To eliminate shock hazard.

A43. Visual and signal tracing.

APPENDIX I

GLOSSARY

ACCEPTOR IMPURITY—An impurity which, when added to a semiconductor, accepts one electron from a neighboring atom and creates a hole in the lattice structure of the crystal. Also called TRIVALENT impurities.

ALLOYED JUNCTION—A junction formed by recrystallization of a molten region of P-type material on an N-type substrate, or vice versa.

ALPHA—The emitter-to-collector current gain in a common-base circuit.

AMPLIFICATION—The ratio of output magnitude to input magnitude in a device that is intended to produce an output that is an enlarged reproduction of its input.

AMPLIFICATION FACTOR—The voltage of an amplifier with no load on the output.

AMPLIFIER—The device that provides amplification (the increase in current, voltage, or power of a signal) without appreciably altering the original signal.

AMPLITUDE DISTORTION—Distortion that is present in an amplifier when the amplitude of the output signal fails to follow exactly any increase or decrease in the amplitude of the input signal.

ANODE—A positive electrode of an electrochemical device (such as a primary or secondary electric cell) toward which the negative ions are drawn.

AVALANCHE EFFECT—A reverse breakdown effect in diodes that occurs at reverse voltage beyond 5 volts. The released electrons are accelerated by the electric field, which results in a release of more electrons in a chain or "avalanche" effect.

BASE—The element in a transistor that controls the flow of current carriers.

BETA—The ratio of a change in collector current to a corresponding change in base current, when the collector voltage is constant in a common-emitter circuit.

BREAKDOWN—The phenomenon occurring in a reverse-biased semiconductor diode. The start of the phenomenon is observed as a transition from a high dynamic resistance to one of substantially lower dynamic resistance. This is done to boost the reverse current.

CAPACITOR FILTER—This filter is used on extremely high-voltage, low current power supplies and also where the ripple frequency is not critical.

CATHODE—The negative terminal of a forward-biased semiconductor diode that is the source of the electrons.

CHOKE—An inductor used to impede the flow of pulsating dc or ac by means of self-inductance.

CLASS A AMPLIFIER OPERATION—The amplifier is biased so that variations in input signal polarities occur within the limits of cutoff and saturation.

CLASS AB AMPLIFIER OPERATION—The amplifier is biased so that collector current is cut off for a portion of the alternation of the input signal.

CLASS B AMPLIFIER OPERATION—The amplifier is biased so that collector current is cut off for one-half of the input signal.

CLASS C AMPLIFIER OPERATION—The amplifier is biased so that collector current is cut off for more than one-half of the input signal.

COLLECTOR—The element in a transistor which collects the current carriers.

COMMON BASE—A transistor circuit in which the base electrode is the common element to both input and output circuits.

COMMON COLLECTOR—A transistor circuit configuration in which the collector is the common element to the input circuit and to the output circuit.

COMMON EMITTER—Circuit configuration in which the emitter is the element common to both the input and the output circuit.

CONDUCTION BAND—A partially filled energy band in which electrons can move freely.

COVALENT BOND—A type of linkage between atoms.

CURRENT REGULATOR—A circuit that provides a constant current output.

DEGENERATION—The process whereby a part of the output signal of an amplifying device is returned to its input circuit in such a manner that it tends to cancel part of the input.

DEPLETION REGION—The region in a semiconductor where essentially all free electrons and holes have been swept out by the electrostatic field that exists there.

DIODE—A two element solid-state device made of either germanium or silicon. It is primarily used as a switching device.

DONOR—An impurity that can make a semiconductor material an N-type by donating extra "free" electrons to the conduction band.

DONOR IMPURITY—See PENTAVALENT IMPURITY.

DOPING—The process of adding impurities to semiconductor crystals to increase the number of free charges that can be moved by an external, applied voltage. Doping produces an N-type or P-type material.

DUAL-GATE MOSFET—A two-gate MOSFET in which either gate can control the conductor independently, a fact which makes this MOSFET very versatile.

EFFICIENCY—The ratio of output-signal power compared to the total input power.

EMITTER—The element in a transistor that emits current carriers (electrons or holes).

EXTRINSIC—A semiconductor in which impurities have been added to create certain charge carrier concentrations.

FIELD-EFFECT TRANSISTOR (FET)—A transistor consisting of a source, a gate, and a drain. Current flow is controlled by the transverse electric field under the gate.

FIDELITY-—The faithful reproduction of a signal. The accuracy with which a system reproduces a signal at its output that faithfully maintains the essential characteristics of the input signal.

FIXED BIAS—A constant value of bias voltage.

FORBIDDEN BAND—The energy band in an atom lying between the conduction band and the valence band. Electrons are never found in the forbidden band but may travel back and forth through it. The forbidden band determines whether a solid material will act as a conductor, a semiconductor, or an insulator.

FORWARD BIAS—An external voltage that is applied to a PN junction in the conducting direction so that the junction offers only minimum resistance to the flow of current. Conduction is by majority current carriers (holes in P-type material; electrons in N-type material).

FREE CHARGES—Those electrons that can be moved by an externally applied voltage.

FULL-WAVE RECTIFIER—A circuit that uses both positive and negative alternations in an alternating current to produce direct current.

FULL-WAVE VOLTAGE DOUBLER—Consists of two full-wave voltage rectifiers and is used to reduce the output ripple frequency.

FUSED-ALLOY JUNCTION—See ALLOYED-JUNCTION.

GALENA—A crystalline form of lead sulfide used in early radio receivers.

GAMMA—The emitter-to-base current ratio in a common-collector configuration.

GERMANIUM—A grayish-white metal having semiconductor properties.

GROWN JUNCTION—A method of mixing P-type and N-type impurities into a single crystal while the crystal is being grown.

HALF-WAVE RECTIFIER—A rectifier using only one-half of each cycle to change ac to pulsating dc.

HALF-WAVE VOLTAGE DOUBLER—Consists of two half-wave voltage rectifiers.

HOLE FLOW—In the valence band, a process of conduction in which electrons move into holes, thereby creating other holes that appear to move toward a negative potential. (The movement of holes is opposite the movement of electrons.)

HYBRID CIRCUIT—A circuit where passive components (resistors, capacitors) are deposited onto a substrate made of glass, ceramic, or other insulating material. Then the active components (diodes, transistors) are attached to the substrate and connected to the passive components on the substrate with a very fine wire.

IGFET—Any field-effect transistor that has an insulated gate.

INDUCED CHANNEL MOSFET—A MOSFET in which there is no actual channel between the source and the drain. This MOSFET is constructed by making the channel the same type of material as the substrate.

INDUCTANCE—The properties of a circuit that tend to oppose any change in current flow.

INTEGRATED CIRCUIT—A circuit in which many elements are fabricated and interconnected by a single process (into a single chip), as opposed to a "nonintegrated" circuit in which the transistors, diodes, resistors, and other components are fabricated separately and then assembled.

JUNCTION DIODE—A two-terminal device containing a single crystal of semiconducting material, which ranges from P-type at one terminal to N-type at the other.

JUNCTION TRANSISTOR—A bipolar transistor constructed from interacting PN junctions. The term is used to distinguish junction transistors from other types such as field-effect and point-contact.

LC CAPACITOR-INPUT FILTER—This is the most common type of filter. It is used in a power supply where output current is low and load current is relatively constant.

LC CHOKE-INPUT FILTER—This filter is used in power supplies where voltage regulation is important and where the output current is relatively high and subject to varying load conditions.

LIGHT-EMITTING DIODE (LED)—A PN junction diode that emits visible light when it is forward biased. Depending on the material used to make the diode, the light may be red, green or amber.

LINEAR—Having an output that varies in direct proportion to the input.

MAJORITY CARRIERS—The mobile charge carriers (holes or electrons) that are predominate in a semiconductor material; for example, electrons in an N-type region.

METAL-OXIDE SEMICONDUCTOR FIELD-EFFECT TRANSISTOR—See MOSFET.

METALLIC RECTIFIER—Also known as a DRY-DISC RECTIFIER. A metal to semiconductor large-area contact device in which a semiconductor is sandwiched between two metal plates. This asymmetrical construction permits current to flow more readily in one direction than the other.

MICROELECTRONICS—The solid-state concept of electronics in which compact semiconductor materials are designed to function as an entire circuit or subassembly rather than as circuit components.

MINORITY CARRIERS—Either electrons or holes, whichever is the less dominant carrier in a semiconductor device. In P-type semiconductors, electrons are the minority carriers; in N-type semiconductors, the holes are the minority carriers.

MINORITY CURRENT—A very small current that passes through the base-to-collector junction when this junction is reverse biased.

MODULAR CIRCUITRY—A technique where printed circuit boards are stacked and connected together to form a module.

MONOLITHIC CIRCUIT—A circuit where all elements (resistors, transistors, etc.) associated with the circuit are fabricated inseparably within a continuous piece of material (called the substrate), usually silicon.

METAL-OXIDE SEMICONDUCTOR FIELD-EFFECT TRANSISTOR—See MOSFET.

MOSFET—A semiconductor device that contains diffused source and drain regions on either side of a P- or N-channel area. Also contains a gate insulated from the channel area by silicon-oxide. Operates in either the depletion or the enhancement mode.

Mu—English spelling for the Greek letter μ.

NEGATIVE TEMPERATURE COEFFICIENT—A characteristic of a semiconductor material, such as silver sulfide, in which resistance to electrical current flow decreases as temperature increases.

NONLINEAR—Having an output that does not rise or fall directly with the input.

NPN—An NPN transistor is formed by introducing a thin region of P-type material between two regions of N-type material.

OPTICAL COUPLER—A coupler composed of an LED and a photodiode and contained in a light-conducting medium. Suitable for frequencies in the low-megahertz range.

OPTOELECTRONIC DEVICES—Devices that either produce or use light in their operation.

OVERDRIVEN—When the input signal amplitude is increased to the point that the transistor goes into saturation and cutoff.

PENTAVALENT IMPURITY—A type of impurity which contains five valence electrons and donates one electron to the doped material. Also called DONOR IMPURITY.

PHOTOCELL—A light-controlled variable resistor that has a light-to-dark resistance ratio of 1:1000. Used in various types of control and timing circuits.

PHOTODIODE—A light-controlled variable resistor. Current flow increases when the PN junction is exposed to an external light source

PHOTOTRANSISTOR—An optoelectronic device that conducts current when exposed to light. Produces more current and is much more sensitive to light than the photodiode.

PHOTOVOLTAIC CELL (SOLAR CELL)—A device that acts much like a battery when exposed to light and converts light energy into electrical energy.

POINT-CONTACT TRANSISTOR—A semiconductor diode that can work with and amplify the ultrahigh frequencies used in radar.

POSITIVE TEMPERATURE COEFFICIENT—The characteristic of a conductor in which the resistance increases as temperature increases.

POWER SUPPLY—A unit that supplies electrical power to another unit. It changes ac to dc and maintains a constant voltage output within limits.

PRINTED CIRCUIT BOARD—A flat insulating surface upon which printed wiring and miniaturized components are connected in a predetermined design and attached to a common base.

QUANTUM-MECHANICAL TUNNELING—When an electron is able to cross a PN junction because of tunnel effect.

QUIESCENCE—The operating condition of a circuit when no input signal is being applied to the circuit.

RC FILTER—This filter is used in applications where load current is low and constant, and voltage regulation is not necessary.

RECTIFIER—A device which, by its conduction characteristics, converts alternating current to a pulsating direct current.

REGULATOR—The section in a basic power supply that maintains the output of the power supply at a constant level in spite of large changes in load current or in input line voltage.

REVERSE BIAS—When an external voltage is applied to a PN junction and the junction offers a high resistance to current flow.

RIPPLE FREQUENCY—The frequency of the ripple current. In a full-wave rectifier, it is twice the input-line frequency.

RIPPLE VOLTAGE—The alternating component of unidirectional voltage. (This component is small compared to the direct component.)

SELENIUM—A chemical element which has rectification and light-sensitive properties that make it widely used as a semiconductor material.

SERIES VOLTAGE REGULATOR—A regulator with a regulating device that is in series with the load resistance.

SHUNT VOLTAGE REGULATOR—A regulator whose regulating device is in parallel with the load resistance.

SILICON—A metallic element which, in its pure state, is used as a semiconductor.

SILICON-CONTROLLED RECTIFIER (SCR)—A semiconductor device that functions as an electrically controlled switch.

SOLID-STATE DEVICE—An electronic device which operates by the movement of electrons within a solid piece of semiconductor material.

THERMAL RUNAWAY—A conduction that exists when heat causes more electron-hole pairs to be generated; which, in turn, causes more heat and may eventually cause diode destruction.

TRANSISTOR—A semiconductor device with three or more elements.

TRIAC—A three-terminal device that is similar to two SCRs back to back with a common gate and common terminals. Although similar in construction and operation to the SCR, the TRIAC controls and conducts current flow during both alternations of an ac cycle.

TRIVALENT IMPURITY—Acceptor impurities containing only three valence electrons.

TUNNEL DIODE—A heavily doped semiconductor device that has high gain and fast switching capabilities.

UNIJUNCTION TRANSISTOR (UJT)—A three-terminal, solid-state device that resembles a transistor but is stable over a wide range of temperatures and allows a reduction of components when used in place of a transistor. Used in switching circuits, oscillators, and wave-shaping circuits.

VARACTOR—A diode that behaves like a variable capacitor, with the PN junction functioning like the dielectric and the plates of a common capacitor.

VOLTAGE GAIN—Ratio of voltage across a specified load.

VOLTAGE MULTIPLIERS—Methods of increasing voltages used primarily where low current is required.

ZENER DIODE—A PN-junction diode designed to operate in the reverse-bias breakdown region.

ZENER EFFECT—A reverse breakdown effect in diodes in which breakdown occurs at reverse voltages below 5 volts. The presence of a high energy field at the junction of a semiconductor produces the breakdown.

APPENDIX II

PERIODIC TABLE OF THE ELEMENTS

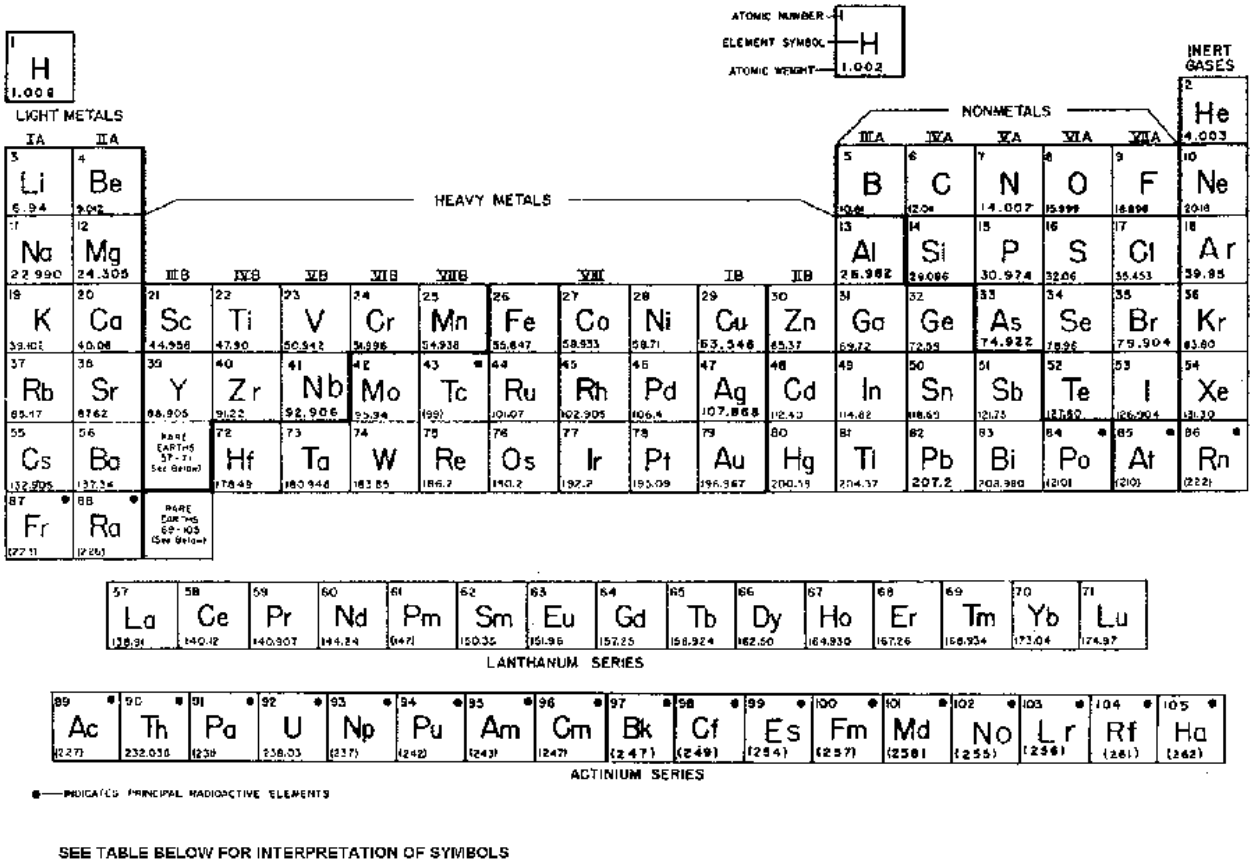

Figure AII-1.—Periodic table of the elements.

Table AII-1.—Periodic Table of the Elements

Symbol	Name	Atomic Number	Atomic Weight
Ac	Actinium	89	1(227)
Ag	Silver	47	107.868
Al	Aluminum	13	6.982
Am	Americium	95	(243)
Ar	Argon	18	39.95
As	Arsenic	33	74.922
At	Astatine	85	(210)
Au	Gold	79	196.967
B	Boron	5	10.81
Ba	Barium	56	137.34
Be	Beryllium	4	9.012
Bi	Bismuth	83	208.980
Bk	Berkelium	97	(247)
Br	Bromine	35	79.904
C	Carbon	6	12.011
Ca	Calcium	20	40.08
Cd	Cadium	48	112.40
Ce	Cerium	58	140.12
Cf	Californium	98	(249)
Cl	Chlorine	17	35.453
Cm	Curium	96	(247)
Co	Cobalt	27	58.933
Cr	Chromium	24	51.996
Cs	Cesium	55	132.905
Cu	Copper	29	63.546
Dy	Dysprosium	66	162.50
Es	Einsteinium	99	(254)
Er	Erbium	68	167.26
Eu	Europium	63	151.96
F	Fluorine	9	18.998
Fe	Iron	26	55.847
Fm	Fermium	100	(257)
Fr	Francium	87	(223)
Ga	Gallium	31	69.72
Gd	Gadolinium	64	157.25
Ge	Germanium	32	72.59
H	Hydrogen	1	1.008
Ha	Hahnium	105	(262)
He	Helium	2	4.003
Hf	Hafnium	72	178.49
Hg	Mercury	80	200.59
Ho	Holmium	67	164.930
I	Iodine	53	126.904

Table AII-1.—Periodic Table of the Elements—Continued

Symbol	Name	Atomic Number	Atomic Weight
In	Indium	49	114.82
Ir	Iridium	77	192.2
K	Potassium	19	39.102
Kr	Krypton	36	83.80
La	Lanthanum	57	138.91
Li	Lithium	3	6.94
Lr	Lawrencium	103	(256)
Lu	Lutetium	71	174.97
Md	Mendelevium	101	(258)
Mg	Magnesium	12	24.305
Mn	Manganese	25	54.938
Mo	Molybdenum	42	95.94
N	Nitrogen	7	14.007
Na	Sodium	11	22,990
Nb	Niobium	41	92.906
Nd	Neodymium	60	144.24
Ne	Neon	10	20.18
Ni	Nickel	28	58.71
No	Nobelium	102	(255)
Np	Neptunium	93	(237)
O	Oxygen	8	15.999
Os	Osmium	76	190.2
P	Phosphorus	15	30.974
Pa	Protactinium	91	(231)
Pb	Lead	82	207.2
Pd	Palladium	46	106.4
Pm	Promethium	61	(147)
Po	Polonium	84	(210)
Pr	Praseodymium	59	140.907
Pt	Platinum	78	195.09
Pu	Plutonium	94	(242)
Ra	Radium	88	(226)
Rb	Rubidium	37	85.47
Re	Rhenium	75	186.2
Rf	Rutherfordium	104	(261)
Rh	Rhodium	45	102.905
Rn	Radon	86	(222)
Ru	Ruthenium	44	101.07
S	Sulfur	16	32.06
Sb	Antimony	51	121.75
Sc	Scandium	21	44.956
Se	Selenium	34	78.96

Table AII-1.—Periodic Table of the Elements—Continued

Symbol	Name	Atomic Number	Atomic Weight
Si	Silicon	14	28.086
Sm	Samarium	62	150.35
Sn	Tin	50	118.69
Sr	Strontium	38	87.62
Ta	Tantalum	73	180.948
Tb	Terbium	65	158.924
Tc	Technetium	43	(99)
Te	Tellurium	52	127.60
Th	Thorium	90	232.038
Ti	Titanium	22	47.90
Tl	Thallium	81	204.37
Tm	Thulium	69	158.934
U	Uranium	92	238.03
V	Vanadium	23	50.942
W	Tungsten	74	183.85
Xe	Xenon	54	131.30
Y	Yttrium	39	88.905
Yb	Ytterbium	70	173.04
Zn	Zinc	30	65.37
Zr	Zirconium	40	91.22

MODULE 7 INDEX

A

Amplifier classes of operation, 2-21
    class A, 2-21
    class AB, 2-22
    class B, 2-22
    class C, 2-22
Applications, semiconductor, 1-3
Atomic structure, semiconductor theory, 1-5

B

Bias, types of, basic transistor amplifier, 2-18
    base current (fixed bias), 2-19
    combination, 2-20
    self-bias, 2-19
Bridge rectifier, 4-10

C

Capacitor filter, 4-12
Classification, transistor fundamentals, 2-2
Combination bias, 2-20
Competition, semiconductor, 1-4
Conduction process, semiconductor theory, 1-12
Configurations, transistor, 2-23
    common base, 2-26
    common collector, 2-27
    common emitter, 2-24
Construction, semiconductor diode, 1-16
Construction, transistor fundamentals, 2-4
Conventional full-wave rectifier, 4-3
Covalent bonding, semiconductor theory, 1-10
Current regulators, 4-35

D

Diode identification, signal diodes, 1-29
Diode maintenance, signal diodes, 1-31
Diode, semiconductor, 1-15
    construction, 1-16
    diode characteristics, 1-27
    PN junction application, 1-23
Diode, semiconductor—Continued
    PN junction operation, 1-18
Diodes, 3-2
    optoelectronic devices, 3-27
    silicon controlled rectifier (SCR), 3-18
    TRIAC, 3-24
    tunnel, 3-8
    varactor, 3-15
    Zener, 3-2
Doping process, semiconductor, 1-13
    N-type semiconductor, 1-14
    P-type semiconductor, 1-14

E

Energy bands, semiconductor theory, 1-8

F

FET, field-effect transistors, 3-38
Filters, power supply, 4-12
    capacitor, 4-17
    LC capacitor-input, 4-32
    LC choke-input, 4-22
    resistor-capacitor (RC), 4-30
Fixed bias, 2-19

G

Glossary, AI-1

H

Half-wave rectifier, 1-23

I

Identification, transistor, 2-27

L

LC capacitor-input filter, 4-32

LC choke-input filter, 4-22
Load regulation, 4-34

M

Maintenance, transistor, 2-31
    lead identification, 2-32
    precautions, 2-31
    transistor testing, 2-33
Microelectronics, 2-37

N

NPN transistor operation, 2-6

O

Optoelectronic devices, 3-27

P

Periodic table of the elements, AII-1
PN junction application, 1-23
    diode switch, 1-26
    half-wave rectifier, 1-23
PN junction operation, semiconductor diode, 1-15
    current flow in the N-type material, 1-18
    current flow in the P-type material, 1-18
    junction barrier, 1-19
PNP transistor operation, 2-11
Power transformer, 4-3
Practical full-wave rectifier, 4-8

R

Rectifier, 4-4
    bridge, 4-10
    conventional full-wave, 4-7
    half-wave, 4-4
    practical full-wave, 4-8
    ripple frequency, 4-6
    rms, peak, and average values, 4-5
Rectifier diodes, 1-28
Regulators, power supply, 4-35
    current, 4-43
Regulators, power supply—Continued
    series and shunt voltage regulators, 4-36
Resistor-capacitor (RC) filters, 4-30
Ripple frequency, 4-6

S

SCR, silicon controlled rectifier, 3-18
Self-bias, 2-19
Semiconductor diodes, 1-1
    diode identification, 1-29
    diode maintenance, 1-31
    introduction to solid-state devices, 1-1
    rectifier diodes, 1-28
    semiconductor applications, 1-3
    semiconductor competition, 1-4
    semiconductor development, 1-2
    semiconductor theory, 1-5
    signal diodes, 1-28
    summary 1-34
Series and shunt voltage regulators, 4-36
Solid-state devices, introduction to, 1-1
Solid-state power supplies, 4-1
    basic power supply, 4-1
    troubleshooting, 4-51
Special devices, 3-1
Specifications, transistor, 2-29

T

Theory, semiconductor, 1-5
    atomic structure, 1-5
    conduction process, 1-12
    covalent bonding, 1-10
    doping process, 1-13
    energy bands, 1-8
Transistors, 2-1
    basic transistor amplifier, 2-15
    FET (field effect), 3-38
    fundamentals, 2-2
    identification, 2-30
    introduction to, 2-1
    maintenance, 2-31
    microelectronics, 2-37
    specifications, 2-29
    UJT (unijunction), 3-34

TRIAC, 3-22
Troubleshooting power supplies, 4-51
    testing, 4-49
Tunnel diode, 3-8

U

UJT, unijunction transistor, 3-34

V

Varactor, 3-15
Voltage multipliers, power supply, 4-45
    short circuit protection, 4-50
Voltage regulation, power supply, 4-34

Z

Zener diodes, 3-2

Assignment Questions

<u>Information</u>: The text pages that you are to study are provided at the beginning of the assignment questions.

ASSIGNMENT 1

Textbook assignment: Chapter 1, "Semiconductor Diodes," pages 1-1 through 1-47.

1-1. Which of the following electronic devices operates by virtue of the movement of electrons within a solid piece of semiconductor material?

1. Transistor
2. Junction diode
3. Solid-state device
4. Each of the above

1-2. Which of the following electronic devices is a minute piece of semiconductor material that can produce complete electronic circuit functions?

1. Zener diode
2. Light-emitting diode
3. Integrated circuit
4. Field effect transistor

1-3. Which of the following terms is used for the decrease in resistance as the temperature of the semiconductor increases?

1. Positive temperature coefficient
2. Negative temperature coefficient
3. Faraday temperature coefficient
4. Zero temperature coefficient

1-4. In addition to rectifying properties, selenium has the property of being light sensitive. How is selenium's resistance affected by light?

1. It decreases with an increase in light intensity
2. It increases with an increase in light intensity
3. It remains constant with variation in light intensity
4. It increases regardless of the variation in light intensity

1-5. One of the most sensitive elements of semiconductor materials is galena. Galena is a crystalline form of what material?

1. Krypton
2. Bismuth
3. Strontium
4. Lead sulfide

1-6. What significant discovery caused a breakthrough in the development of semiconductor devices?

1. The junction diode
2. The junction barrier
3. The extrinsic semiconductor
4. The point-contact transistor

1-7. Which of the following devices is frequently used to regulate power supply voltages at precise levels?

1. Junction diode
2. Tunnel diode
3. Esaki diode
4. Zener diode

1-8. Which of the following solid-state devices has both gain and fast-switching capabilities?

1. Zener diode
2. Tunnel diode
3. Junction diode
4. Point-contact diode

1-9. Which of the following advantages, if any, does a conventional electron tube have over a semiconductor device?

1. It is more efficient
2. It has a longer life
3. It is more economical
4. None of the above

1-10. When compared to an electron tube, the semiconductor device has which of the following limitations?

1. The semiconductor is more sensitive to temperature
2. The semiconductor is used only in radar equipment
3. The semiconductor is difficult to adapt to commercial products
4. Each of the above

1-11. Matter can be found in which of the following forms?

1. Solid
2. Liquid
3. Gas
4. Each of the above

1-12. A substance that cannot be reduced to a simpler form by chemical means is called a/an

1. element
2. mixture
3. compound
4. solution

1-13. An atom is the smallest possible particle that retains the characteristics of which of the following substances?

1. An element
2. A mixture
3. A compound
4. A solution

1-14. A molecule is the smallest possible particle that retains the characteristics of which of the following substances?

1. An element
2. A mixture
3. A compound
4. A solution

1-15. Which part of the atom has a negative charge and a small mass?

1. Proton
2. Electron
3. Positron
4. Neutron

1-16. Which part of the atom has a positive charge and a large mass?

1. Proton
2. Electron
3. Positron
4. Neutron

1-17. Which part of the atom has no electrical charge?

1. Proton
2. Electron
3. Positron
4. Neutron

1-18. What name is given to the outermost shell of an atom?

1. First shell
2. M shell
3. Valence shell
4. Subshell

1-19. What term is used to describe an atom which has more than its normal amount of electrons?

1. Ion
2. Ionization
3. Positive ion
4. Negative ion

1-20. Which of the following terms is defined as the process by which an atom gains or loses electrons?

1. Quanta
2. Ionization
3. Loss of energy
4. Remaining energy

1-21. Electrons are NEVER found in which of the following bands?

1. Energy band
2. Valence band
3. Forbidden band
4. Conduction band

1-22. What determines whether a substance is an insulator, semi-conductor, or conductor?

1. The separation between the valence and forbidden bands
2. The separation between the conduction and valence bands
3. The separation between the conduction and forbidden bands
4. The separation between the forbidden band and the energy gap

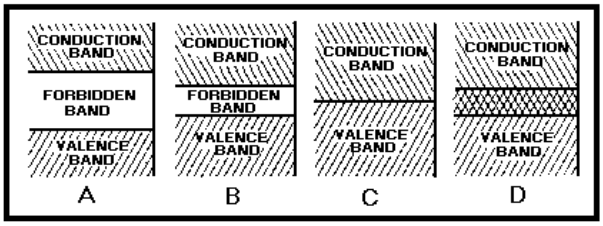

Figure 1A.—Energy level diagram.

IN ANSWERING QUESTIONS 1-23 AND 1-24, REFER TO FIGURE 1-A.

1-23. What energy level in figure 1-A is classified as the best insulator?

1. A
2. B
3. C
4. D

THIS SPACE LEFT BLANK INTENTIONALLY.

1-24. When the insulator is compared to the semiconductor, (a) which one requires the least energy to move an electron and (b) from which point in the energy level in figure 1-A does the electron leave in its travel to the conduction band?

1. (a) Semiconductor (b) Valence band
2. (a) Insulator (b) Valence band
3. (a) Semiconductor (b) Forbidden band
4. (a) Insulator (b) Forbidden band

1-25. Which of the following terms applies to the process that holds the atom together in a crystal?

1. Suhl effect
2. Superposition
3. Boundary defect
4. Covalent bonding

1-26. The movement of electrons in a semiconductor toward the applied voltage is termed

1. hole flow
2. positive conduction
3. negative conduction
4. electron current flow

1-27. When the theory of semiconductors is discussed, what term(s) is/are used to describe the current that flows in the semiconductor?

1. Hole flow
2. Electron flow
3. Both 1 and 2 above
4. Electromotive flow

1-28. What process takes place within the semiconductor to cause hole flow?

1. The breaking of covalent bonds
2. The combining of valence bands
3. The flexing of the material
4. The splitting of atoms

1-29. A material which has an equal number of electron-hole pairs and conducting electrons is known as what type of semiconductor material?

1. Extrinsic
2. Intrinsic
3. N-type
4. P-type

1-30. The process of adding impurities to crystals is known by which of the following terms?

1. Charging
2. Doping
3. Honing
4. Processing

1-31. When doping increases the number of free electrons in a semiconductor, what type of impurity has been added?

1. E-type
2. N-type
3. O-type
4. P-type

1-32. The semiconductor doping impurities—arsenic, antimony, and bismuth—are classified as what type of impurities?

1. Active
2. Neutral
3. Trivalent
4. Pentavalent

1-33. In the P-type semiconductor, what are the majority carriers?

1. The electrons
2. The holes
3. The inactive atoms
4. The inert atoms

1-34. What is/are the purpose(s) of the PN junction diode?

1. To rectify only
2. To amplify only
3. To rectify and amplify
4. To switch

1-35. In a schematic diagram of a PN junction diode, which of the following symbols represents the cathode (N-type material)?

1. The arrow
2. The circle
3. The vertical bar
4. The horizontal line

1-36. Which of the following alphanumerical codes correctly identifies the diode, crystal rectifier number 3, in a circuit?

1. CR3
2. DR3
3. RD3
4. CRD3

1-37. Which of the following is the schematic symbol of the PN junction diode?

1. 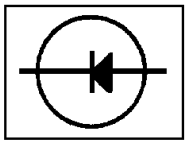

3. 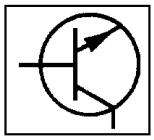

2.

4 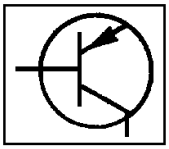

1-38. The placing of an impurity on a semiconductor of the opposite impurity and fusing the two together produce what type of semiconductor junction?

1. Grown junction
2. Alloy Junction
3. Barrier junction
4. Intrinsic junction

1-39. A perfect bond at the junction of the two diode materials is important for which of the following reasons?

1. It is the point at which rectification takes place
2. It is the point at which amplification takes place
3. It is the main structural point from where the diode gets its strength
4. All of the above

1-40. Current flow in a copper wire can be compared to current flow in what type(s) of semiconductor material?

1. N-type only
2. P-type only
3. N- and P-type
4. All types

1-41. What is the overall electrical charge of the N-material in a semiconductor?

1. Zero
2. Some negative value
3. Some positive value
4. Depending upon the balance of electrons, it will be positive or negative

1-42. What is the overall electrical charge of the P-material in a semiconductor?

1. Zero
2. Some negative value
3. Some positive value
4. Depending upon the balance of electrons, it will be positive or negative

1-43. What causes the process called junction recombination to occur when N and P materials are joined together?

1. The diffusion of electrons and holes moving across the junction into the two materials
2. The generation of heat which causes the electrons to bombard the holes at the junction
3. The development of an electrostatic field on each side of the junction
4. The loss of electrons to the depletion region

1-44. After the junction recombination process has reached equilibrium, what is the area that surrounds the junction called?

1. The anode
2. The free ion space
3. The depletion region
4. The electrostatic field

1-45. A voltage applied to a PN junction so that it reduces the junction barrier and aids current flow is what type of bias?

1. Indirect
2. Reverse
3. Forward
4. Direct

1-46. In a forward-biased PN junction, when an electron leaves the negative terminal of the battery and enters the N material, it becomes what type of carrier?

1. Loop
2. Signal
3. Majority
4. Minority

1-47. Which of the following illustrations depicts a properly forward-biased PN junction? (Note: The number of elements in the battery indicates the applied voltages.)

1.

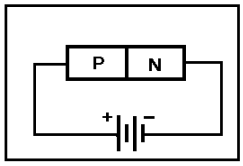

2.

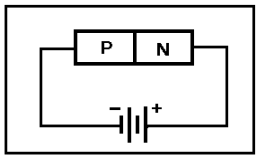

3.

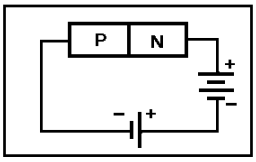

4.

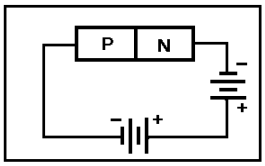

1-48. In the PN junction, which of the following actions will increase the number of majority carriers and increase current flow in a forward-biased condition?

1. Increasing the size of the P material
2. Decreasing the size of the P material
3. Increasing battery voltage
4. Decreasing battery voltage

1-49. A voltage applied to a PN junction so that it will increase the junction barrier and offer a high resistance to current flow is called what type of bias?

1. Direct
2. Forward
3. Reverse
4. Indirect

1-50. When the negative terminal of a battery is connected to the P material, and the positive terminal is connected to the N material, what type of bias is being used?

1. Self
2. Forward
3. Reverse
4. Inverse

1-51. What provides you with information concerning the voltage-current relationship of a PN junction diode?

1. The body color of the diode
2. The color coded bands on the diode
3. The printed information on the diode
4. The characteristic curve graph of the diode

THIS SPACE LEFT BLANK INTENTIONALLY.

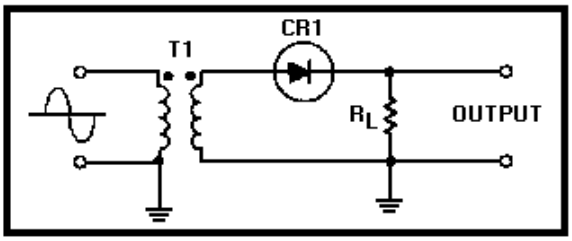

Figure 1B.—An electronic circuit.

IN ANSWERING QUESTIONS 1-52 THROUGH 1-55, REFER TO FIGURE 1-B.

1-52. What type of circuit is shown in figure 1-B?

1. Full-wave rectifier
2. Half-wave rectifier
3. Clipper
4. Clamper

1-53. With the input shown, which of the following outputs would be correct?

1. 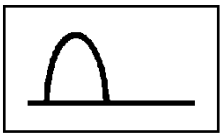

2. 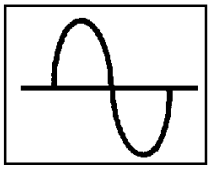

3. 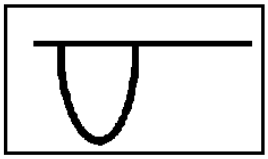

4. 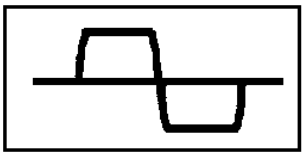

1-54. Which of the following outputs would be correct with two alternations of the ac input signal applied?

1. 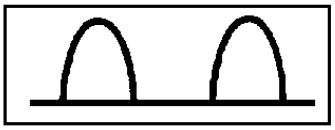

2. 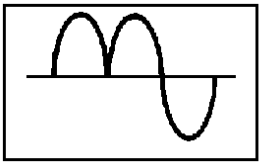

3. 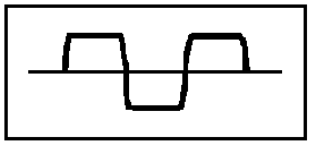

4. 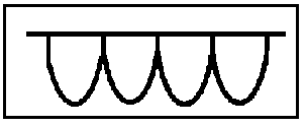

1-55. What is/are the purposes(s) of RL?

1. It limits the amount of current flow in the circuit
2. It develops the output signal
3. Both 1 and 2 above
4. It maintains the proper bias on the diode

THIS SPACE LEFT BLANK INTENTIONALLY.

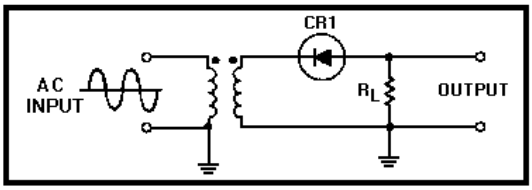

Figure 1C

IN ANSWERING QUESTIONS 1-56 AND 1-57, REFER TO FIGURE 1-C.

1-56. What type of circuit is shown in figure 1-C?

1. Positive half-wave rectifier
2. Negative half-wave rectifier
3. Full-wave rectifier
4. Clipper

1-57. With the input shown in figure 1-C, which of the following outputs would be correct?

1.

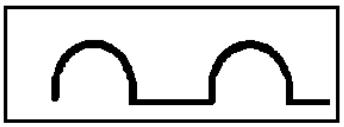

2.

3.

4.

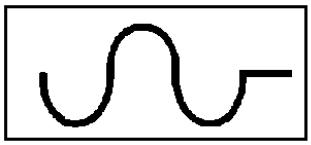

1-58. If the input frequency to a half-wave rectifier is 120 hertz, what is the output frequency of the rectified dc?

1. 30 pps
2. 60 pps
3. 120 pps
4. 240 pps

1-59. Why are the units (plates) of the metallic rectifier stacked?

1. To dissipate heat
2. To be used in more than one circuit
3. To prevent inverse voltage breakdown
4. To handle high current applications

1-60. Which of the following types of rectifiers replaces the bulky selenium rectifier?

1. Copper-oxide rectifier
2. Half-wave rectifier
3. Metallic rectifier
4. Silicon rectifier

1-61. Signal diodes are used for which of the following purposes?

1. As mixers
2. As switches
3. As detectors
4. Each of the above

1-62. What type of bias makes a diode act as an open switch?

1. Direct
2. Reverse
3. Forward
4. Switching

1-63. A standard specification sheet for a diode contains which of the following information?

1. A brief description of the diode
2. Major application of the diode
3. Special features of the diode
4. All of the above

IN ANSWERING QUESTIONS 1-64 THROUGH 1-66, MATCH THE ELECTRICAL LETTER SYMBOL FOR RECTIFIER DIODES IN COLUMN B TO THE DEFINITION IN COLUMN A.

	A. DEFINITIONS		B. SYMBOLS
1-64.	The maximum reverse dc voltage that will not cause breakdown	1.	V_R
1-65.	The peak current specified for a given number of cycles or portion of a cycle	2.	I_{SURGE}
1-66.	The average reverse current at a specified temperature, usually 60 hertz	3.	$I_{F(AV)}$
		4.	$I_{R(AV)}$

1-67. A matching pair of diodes is indicated by which of the following numbers?

1. 2N325
2. 1N325C
3. 2N325M
4. 1N325M

1-68. The number 3N345 identifies which of the following semiconductors, if any?

1. Diode
2. Transistor
3. Tetrode transistor
4. None of the above

1-69. What type of diode has green, blue, and orange bands?

1. 1N463
2. 1N572
3. 1N663
4. 1N563

1-70. One of the prime dangers to the semiconductor diode is heat. Excessive current generated by heat which eventually destroys a diode is called

1. junction overload
2. thermal runaway
3. thermoplastic action
4. thermionic emission

1-71. When replacing a diode in a circuit, which of the following safety precautions should you observe in removing the diode from the circuit?

1. Do not pry the diode from the circuit
2. Do not use excessive heat to remove the diode
3. Do not remove the diode from the circuit while voltage is applied
4. All of the above

1-72. As you make a front-to-back ratio check of a diode with an ohmmeter, your first measurement (forward) is a low resistance reading, and your second measurement (reverse) is also a low reading. What should be your evaluation of the diode?

1. It is open
2. It is shorted
3. It is good
4. It is leaky

1-73. What are normally the front-to-back ratio of (a) a power rectifier and (b) a signal diode?

1. (a) 10:1 (b) 50:1
2. (a) 10:1 (b) 300:1
3. (a) 300:1 (b) 10:1
4. (a) 300:1 (b) 50:1

1-74. Of the following tests, which is the most valid for checking a diode?

1. A forward and reverse resistance check with an ohmmeter
2. The substitution of a new diode for the questionable one
3. A dynamic electrical check with a diode test set
4. A forward and reverse resistance check using two different ohmmeters

ASSIGNMENT 2

Textbook assignment: Chapter 2, "Transistors," pages 2-1 through 2-53.

2-1. What term is used for a semiconductor that has three or more elements?

1. Diode
2. Transistor
3. Duo-diode
4. Point contact

2-2. The term transistor was derived from which of the following words?

1. Resistance and capacitance
2. Transformer and resistor
3. Resistor and transformer
4. Transfer and resistor

2-3. What are the three elements of a transistor?

1. Anode, base, and collector
2. Cathode, base, and collector
3. Emitter, collector, and base
4. Collector, emitter, and cathode

2-4. In a transistor, the flow of current carriers is controlled by which element(s)?

1. Emitter
2. Collector
3. Both 1 and 2 above
4. Base

2-5. In a transistor schematic, what is indicated by (a) the angular line with the arrowhead and (b) the direction of the arrow?

1. (a) Cathode
   (b) Direction of current flow
2. (a) Base
   (b) Direction of current flow
3. (a) Emitter
   (b) Type of transistor
4. (a) Collector
   (b) Type of transistor

2-6. Junction transistors have replaced point-contact transistors for which of the following reasons?

1. Junction transistors generate less noise
2. Junction transistors handle more power
3. Junction transistors provide higher current and voltage gains
4. All of the above

2-7. What is the total number of PN junctions in a transistor?

1. One
2. Two
3. Three
4. Four

2-8. What are the two junctions of a transistor?

1. Emitter-base and emitter-collector
2. Emitter-collector and base-collector
3. Emitter-base and collector-emitter
4. Emitter-base and base-collector

2-9. With proper bias applied to a transistor, what should be the relative resistance of (a) the emitter-base junction and (b) the base-collector junction?

1. (a) High (b) low
2. (a) High (b) high
3. (a) Low (b) low
4. (a) Low (b) high

2-10. For normal operation of a transistor, what is the bias of the (a) emitter-base junction and (b) base-collector junction?

1. (a) Forward (b) reverse
2. (a) Forward (b) forward
3. (a) Reverse (b) forward
4. (a) Reverse (b) reverse

A.	I_C	E.	V_{BB}
B.	I_B	F.	V_{CEO}
C.	I_E	G.	V_{EB}
D.	V_{CC}	H.	I_{CBO}

Figure 2A.—Transistor symbology.

IN ANSWERING QUESTIONS 2-11 THROUGH 2-15, REFER TO FIGURE 2-A. MATCH THE SYMBOL TO THE TERM GIVEN IN THE QUESTION.

2-11. The symbol for base current.

1. H
2. D
3. C
4. B

2-12. The symbol for collector current.

1. A
2. C
3. G
4. H

2-13. The symbol for emitter current.

1. B
2. C
3. D
4. F

2-14. The symbol for collector voltage supply.

1. C
2. D
3. E
4. F

2-15. The symbol for base voltage supply.

1. E
2. F
3. G
4. H

2-16. In a transistor, what percent of the total current flows through the emitter lead?

1. 100
2. 98
3. 60
4. 5

2-17. What are the majority current carriers in (a) the PNP transistor and (b) the NPN transistor?

1. (a) Holes (b) holes
2. (a) Holes (b) electrons
3. (a) Elements (b) holes
4. (a) Electrons (b) electrons

2-18. How will the transistor currents be affected if the forward bias provided by V_{BB} is increased?

1. I_B will decrease, I_E will decrease, and I_C will decrease
2. I_B will increase, I_E will decrease, and I_C will decrease
3. I_B will increase, I_E will decrease, and I_C will increase
4. I_B will increase, I_E will increase, and I_C will increase

2-19. What device provides an increase in current, voltage, or power of a signal without appreciably altering the original signal?

1. Diode
2. Amplifier
3. Oscillator
4. Power supply

2-20. The resistor that provides forward bias for the emitter-base junction of a transistor is indicated by which of the following symbols?

1. R_T
2. R_g
3. R_L
4. R_B

2-21. The collector load resistor is represented by which of the following symbols?

1. R_T
2. R_g
3. R_L
4. R_B

2-22. In the quiescent state of a transistor circuit, what does the symbol VC indicate?

1. Collector voltage supply
2. Collector voltage
3. Current gain
4. Capacitor voltage

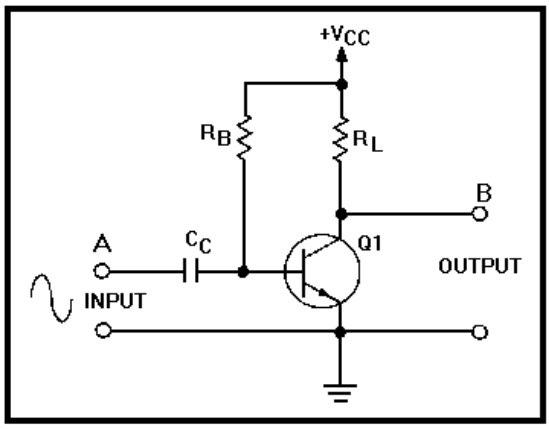

Figure 2B.—A basic transistor amplifier.

IN ANSWERING QUESTIONS 2-23 THROUGH 2-26, REFER TO FIGURE 2-B.

2-23. What is the purpose of CC?

1. To bypass ac signals to ground
2. To couple the input signal to the amplifier
3. To provide base bias to the preceding stage
4. To prevent ac variations on the base

2-24. When the positive alternation of the input signal is applied at point A, what, if anything, happens to the bias on the base of the transistor?

1. It increases
2. It decreases
3. It remains at its quiescent value
4. Nothing

2-25. When the positive alternation of the input signal is applied at point A, what happens, if anything, to the current through RL?

1. It increases
2. It decreases
3. It remains at its quiescent value
4. Nothing

2-26. When the signal shown at point A is applied to the base of Q1, which of the following signals will be at the output?

1. 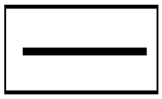

3. 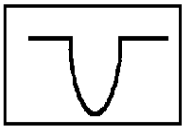

2. 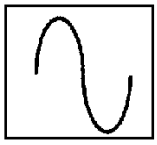

4. 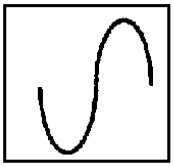

2-27. What type of bias keeps the base bias constant and improves thermal stability?

1. Self-bias
2. Fixed bias
3. Combination bias
4. Each of the above

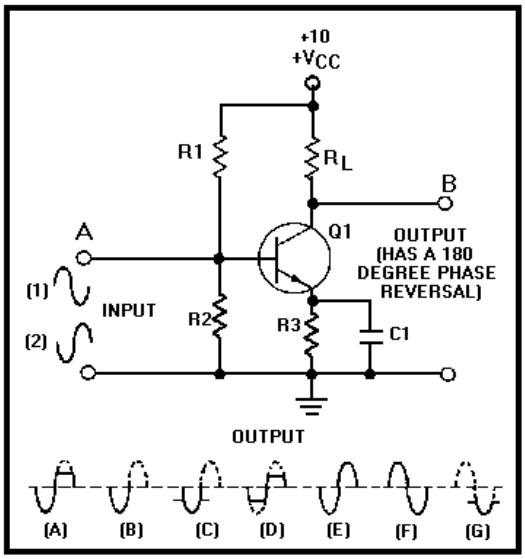

Figure 2C.—A transistor amplifier.

IN ANSWERING QUESTIONS 2-28 THROUGH 2-34, REFER TO FIGURE 2-C.

2-28. Which resistors are fixed biased resistors?

1. R1 and R_L
2. R1 and R3
3. R1 and R2
4. R2 and R3

2-29. Which resistor is self-biased?

1. R1
2. R2
3. R3
4. R_L

2-30. Which waveform is the output for a class AB amplifier with input number 1?

1. A
2. B
3. C
4. D

2-31. Which waveform is the output for a class A amplifier with input number 2?

1. C
2. D
3. E
4. F

2-32. Which waveform is the output for a class B amplifier with input number 1?

1. A
2. B
3. F
4. G

2-33. Which waveform is the output for a Class C amplifier with input number 2?

1. A
2. B
3. C
4. G

2-34. If the circuit is operating as a class A amplifier, but is being "overdriven," which output waveform is correct?

1. A
2. B
3. C
4. D

2-35. Which class of amplifier allows collector current to flow for a full 360 degrees of the input signal?

1. A
2. B
3. C
4. AB

2-36. Which class of amplifier allows collector current to flow for more than 180 degrees of the input signal but less than 360 degrees?

1. A
2. B
3. C
4. AB

2-37. Which class of amplifier has the highest fidelity and lowest efficiency?

1. A
2. B
3. C
4. AB

2-38. Which class of amplifier has the highest efficiency?

1. A
2. B
3. C
4. AB

2-39. What are the three transistor configurations?

1. Common base, common grid, and common output
2. Common anode, common collector, and common base
3. Common emitter, common base, and common collector
4. Common emitter, common base, and common base

THIS SPACE LEFT BLANK INTENTIONALLY.

IN ANSWERING QUESTIONS 2-40 THROUGH 2-45, MATCH THE TRANSISTOR CONFIGURATIONS LISTED IN COLUMN B TO THE TRANSISTOR CIRCUITS SHOWN IN COLUMN A. (NOTE: ANSWERS IN COLUMN B MAY BE USED MORE THAN ONCE.)

A. CIRCUITS

B. CONFIGURATIONS

1. Common Emitter
2. Common Base
3. Common Collector

2-40.

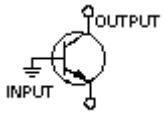

2-41.

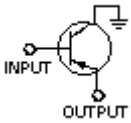

2-42.

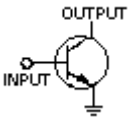

2-43.

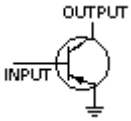

2-44.

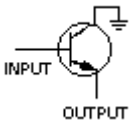

2-45.

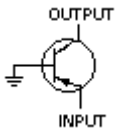

2-46. Which of the following is a transistor configuration that provides a phase reversal?

1. Common bias
2. Common input
3. Common emitter
4. Common collector

2-47. What is the symbol for input current in a common-emitter configuration?

1. I_E
2. I_B
3. I_C
4. I_T

2-48. What is the symbol for input current in a common-base configuration?

1. I_E
2. I_B
3. I_C
4. I_T

2-49. What term is used to indicate current gain in a common-emitter configuration?

1. Alpha
2. Beta
3. Gamma
4. X-ray

2-50. What term is used to indicate current gain in a common-collector configuration?

1. Alpha
2. Beta
3. Gamma
4. X-ray

2-51. What term is used to indicate current gain in a common-base configuration?

1. Alpha
2. Beta
3. Gamma
4. X-ray

2-52. Which of the following formulas is used to figure current gain in a common-emitter configuration?

1. $= \frac{\Delta I_C}{\Delta I_E}$
2. $= \frac{\Delta I_C}{\Delta I_B}$
3. $= \frac{\Delta I_E}{\Delta I_B}$
4. $= \frac{\Delta I_B}{\Delta I_C}$

2-53. Which of the following formulas is used to figure current gain in a common-base configuration?

1. $\alpha = \frac{\Delta I_C}{\Delta I_E}$
2. $\beta = \frac{\Delta I_C}{\Delta I_E}$
3. $\gamma = \frac{\Delta I_E}{\Delta I_B}$
4. $\gamma = \frac{\Delta I_E}{\Delta I_C}$

2-54. Which of the following formulas is used to figure current gain in a common-collector configuration?

1. $\gamma = \frac{\Delta I_E}{\Delta I_B}$
2. $\gamma = \frac{\Delta I_B}{\Delta I_E}$
3. $\beta = \frac{\Delta I_B}{\Delta I_C}$
4. $\alpha = \frac{\Delta I_C}{\Delta I_E}$

2-55. The common collector is also referred to by which of the following terms?

1. Low current gain amplifier
2. Voltage amplifier
3. Emitter follower
4. Grounded emitter

2-56. Which of the following conditions presents the greatest danger to a transistor?

1. Heat
2. High operating voltage
3. Excessive reverse current
4. Handling of the transistor

2-57. What method for checking transistors is cumbersome when more than one transistor is bad in a circuit?

1. Ohmmeter
2. Transistor checker
3. Voltage check
4. Substitution

A.	Hybrid IC
B.	Monolithic IC
C.	Microelectronics
D.	Modular Circuitry
E.	Integrated Circuit
F.	Printed Circuit Board
G.	Integrated Circuit Board

Figure 2D.—List of microelectronic terminology.

IN ANSWERING QUESTIONS 2-58 THROUGH 2-62, SELECT FROM FIGURE 2-D THE TERM DEFINED IN THE QUESTION.

2-58. A broad term used to describe the use of integrated circuits to miniaturize electronic equipment.

1. A
2. B
3. C
4. D

2-59. A flat insulating surface upon which printed wires and miniaturized components are connected in a predetermined design and attached to a common base.

1. A
2. B
3. F
4. G

2-60. An assembly technique in which printed circuit boards are stacked and connected to form a module.

1. B
2. C
3. D
4. E

2-61. A device that integrates both active and passive components of a complete electronic circuit in a single chip.

1. D
2. E
3. F
4. G

2-62. A plastic card on which integrated circuits are mounted.

1. A
2. B
3. F
4. G

ASSIGNMENT 3

Textbook assignment: Chapter 3, "Special Devices," pages 3-1 through 3-55.

3-1. What is the total number of connections in a diode?

1. One
2. Two
3. Three
4. Four

3-2. When the PN-junction diode is reversed biased, what happens to the majority carriers?

1. They combine with minority carriers at the junction
2. They move toward the junction
3. Both 1 and 2 above
4. They move away from the junction

3-3. What causes a small leakage current in a reverse-biased PN junction?

1. Holes
2. Electrons
3. Minority carriers
4. Majority carriers

3-4. At some potential, as you increase the reverse bias voltage on a PN junction, the reverse current increases very rapidly. What electronic term is given to this voltage potential?

1. Breakdown voltage
2. Reverse-bias
3. Forward-bias
4. Thermal runaway

THIS SPACE LEFT BLANK INTENTIONALLY.

3-5. Which of the following is a characteristic of the Zener diode?

1. A PN-junction diode that operates in the reverse-bias breakdown region
2. A PN-junction diode that uses the avalanche effect
3. A PN-junction diode that uses the Zener effect
4. Each of the above

3-6. What determines whether a solid material will act as a conductor, a semiconductor, or an insulator?

1. The energy level of the valence band
2. The energy level of the conductor band
3. The energy difference across the forbidden gap
4. The actual construction of the valence electrons

3-7. In comparing a conductor and an insulator, what is the relative dimension of the forbidden gap of (a) the conductor and (b) the insulator?

1. (a) Wide (b) wide
2. (a) Wide (b) narrow
3. (a) Narrow (b) narrow
4. (a) Narrow (b) wide

THIS SPACE LEFT BLANK INTENTIONALLY.

3-8. What is the "tunneling phenomenon" within the Zener diode?

1. An action where the minority carriers tunnel across the junction to form the current that occurs at breakdown
2. An action where the majority carriers tunnel across the junction to form the current that occurs at breakdown
3. An action that separates the conduction band and the valence band by a large gap
4. An action that removes all the electrons from the conduction band energy level

3-9. Which breakdown theory explains the action that takes place in a heavily doped PN junction with a reverse bias above 5 volts?

1. Zener effect
2. Avalanche breakdown
3. Energy band effect
4. Valence band gap crossing

3-10. Which breakdown theory explains the action that takes place in a heavily doped PN junction with a reverse bias below 5 volts?

1. Zener effect
2. Avalanche breakdown
3. Energy band effect
4. Valence band gap crossing

3-11. What happens to a Zener diode that has a reverse bias slightly higher than the breakdown voltage?

1. The Zener cuts off
2. The Zener acts like a short circuit
3. The Zener acts like an open circuit
4. The Zener conduction does not change

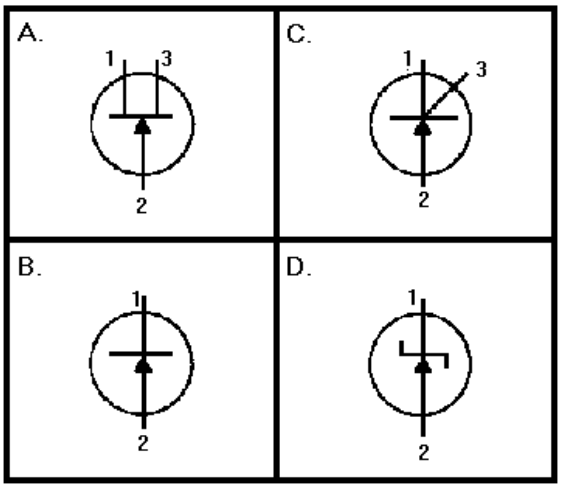

Figure 3A.—Schematic symbols.

IN ANSWERING QUESTIONS 3-12 AND 3-13, REFER TO FIGURE 3-A.

3-12. Which of the symbols represents a Zener diode?

1. A
2. B
3. C
4. D

3-13. In what direction does current flow in a Zener diode?

1. From point 1 to point 2
2. From point 2 to point 1
3. From point 1 to point 2 to point 3
4. From point 3 to point 2 to point 1

3-14. Why is the Zener diode an ideal voltage regulator?

1. It compensates for low supply voltage
2. It uses an unlimited number of carriers
3. Operating in the breakdown region does not harm it
4. The voltage across the diode remains almost constant after breakdown

3-15. In the construction of the tunnel diode, what is the ratio of impurity atoms to semiconductor atoms?

1. 10,000,000: 1000
2. 1,000:10,000,000
3. 10,000: 100,000
4. 100,000: 10,000

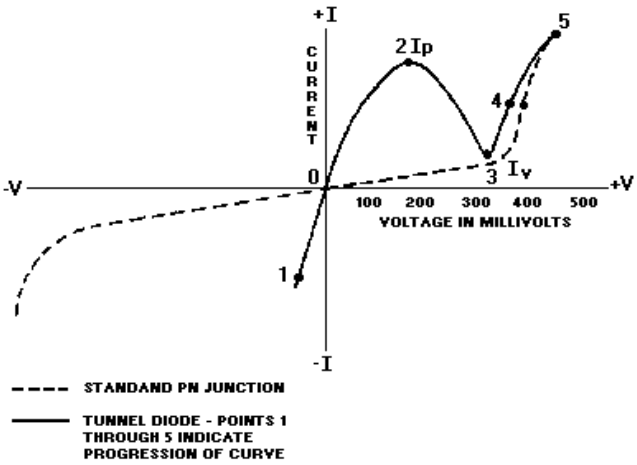

Figure 3B. —Tunnel diode characteristic curve.

IN ANSWERING QUESTIONS 3-16 THROUGH 3-18, REFER TO FIGURE 3-B.

3-16. What is/are the most important aspects(s) of the tunnel diode characteristic curve?

1. The forward-current increase to a peak with small applied forward bias
2. The decreasing forward current with an increasing forward bias to a minimum valley current (I_V)
3. The normal increasing forward current with further increase in the bias voltage
4. All of the above

3-17. What portion of the characteristic curve is the region of negative resistance?

1. From point 1 to point 2
2. From point 2 to point 3
3. From point 3 to point 4
4. From point 4 to point 5

3-18. At what area on the characteristic curve does the tunnel diode perform like a normal PN junction?

1. From point 0 to point 1
2. From point 1 to point 2
3. From point 2 to point 3
4. From point 3 to point 4

3-19. The varactor operates like which of the following electronic components?

1. A capacitor
2. An inductor
3. A variable capacitor
4. A variable inductor

3-20. An increase in reverse bias of a varactor will have what effect on the width of the depletion region?

1. It will stabilize
2. It will fluctuate
3. It will decrease
4. It will increase

3-21. What happens to the capacitance of a varactor diode as the reverse bias is increased?

1. It decreases
2. It increases
3. It remains the same

3-22. In electronic circuits, how is the varactor used?

1. As a tuning device
2. As a balancing device
3. As an amplifier
4. As a rectifier

3-23. What is/are the basic purpose(s) of the silicon controlled rectifier (SCR)?

1. To function as a switch
2. To function as a regulator
3. To function as a rectifier
4. All of the above

3-24. The SCR is equivalent to what electronic device?

1. Diode
2. Tetrode
3. Thyratron
4. Beam power tube

3-25. Which of the following circuits uses an SCR in its electronic circuitry?

1. Computer logic circuit
2. Voltage comparator circuit
3. Antenna power amplifier circuit
4. Each of the above

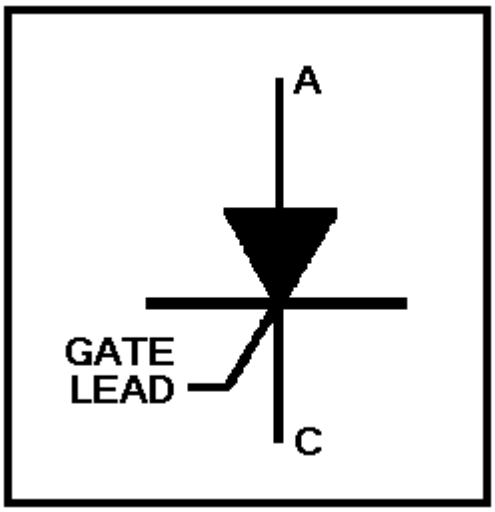

Figure 3C.—The schematic symbol for the SCR.

IN ANSWERING QUESTION 3-26, REFER TO FIGURE 3-C.

3-26. What is the impedance between points A and C (a) when the SCR is biased off and (b) when the SCR is at saturation?

1. (a) Low (b) low
2. (a) Low (b) high
3. (a) High (b) high
4. (a) High (b) low

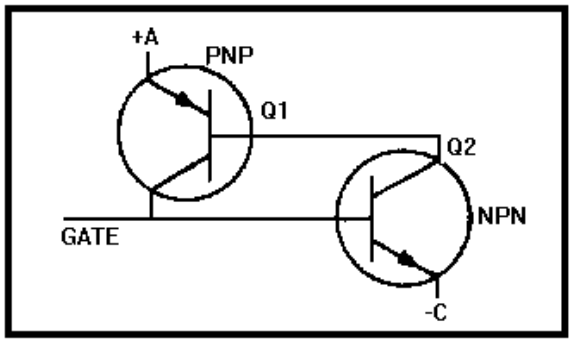

Figure 3D.—A two-transistor circuit.

IN ANSWERING QUESTION 3-27, REFER TO FIGURE 3-D.

3-27. When a positive current is applied to the gate lead, what happens to the collector current of Q1 and Q2?

1. Increases to a value limited only by the external circuit
2. Increases to a value limited only by the internal circuit
3. Decreases to a value limited only by the external circuit
4. Decreases to a value limited only by the internal circuit

3-28. Once an SCR is turned on by a positive pulse of current applied to the gate lead, what action turns the SCR off?

1. Removing the positive pulse from the gate lead
2. Inserting a negative pulse of current on the gate lead
3. Reducing the collector current to a value below that necessary to maintain conduction
4. Increasing the collector current to a point that the SCR will go into saturation and cut off

3-29. What is the total number of terminals in a TRIAC?

1. One
2. Two
3. Three
4. Four

3-30. What is the main difference between the TRIAC and the SCR?

1. The SCR requires a higher input voltage than the TRIAC
2. The TRIAC requires a higher input voltage than the SCR
3. The TRIAC controls and conducts current during both alternations of an ac cycle, while the SCR controls and conducts current during only one alternation
4. The SCR controls and conducts current during both alternations of an ac cycle, while the TRIAC controls and conducts currents during only one alternation

3-31. What name is given to a group of devices that either produce light or use light in their operation?

1. Optoelectronic
2. Ophthalmology
3. Optokenetic
4. Optometry

3-32. In optoelectronic devices, what do the initials LED stand for?

1. Low-emitting diode
2. Low-emitting device
3. Light-emitting diode
4. Light-emitting device

3-33. What determines the color of light emitted by an LED?

1. The type of incandescent bulb used
2. The type of material used
3. The type of bias used
4. The type of fluorescent bulb used

3-34. What is the standard schematic symbol used to designate LEDs?

1. An incandescent bulb with arrows pointing toward the light
2. An incandescent bulb with arrows pointing away from the light
3. A diode with two arrows pointing toward the cathode
4. A diode with two arrows pointing away from the cathode

3-35. The circuit symbols for all optoelectronic devices have arrows pointing either toward them or away from them. When the arrows point toward the symbol, what does this indicate?

1. The device produces light
2. The device uses light
3. The device requires current flow
4. The device produces current flow

THIS SPACE LEFT BLANK INTENTIONALLY.

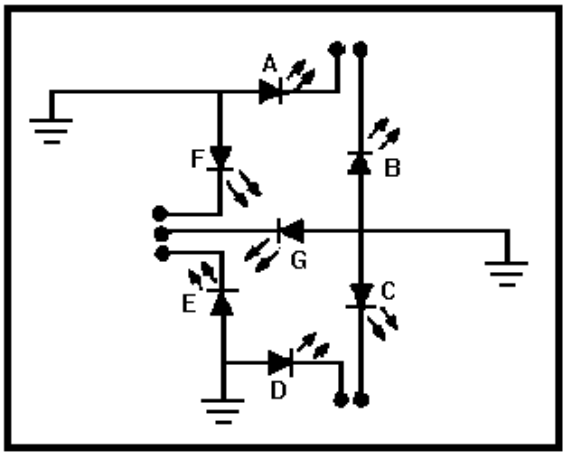

Figure 3E. —Light-emitting diode.

IN ANSWERING QUESTIONS 3-36 AND 3-37, REFER TO FIGURE 3-E.

3-36. When a negative voltage is applied to the proper cathodes in an LED display, a number is formed. To produce the numeral 5 on an LED display, which of the following diodes must have a negative potential on their cathodes?

1. ABCDE
2. ABGED
3. AFGCD
4. AFGBC

3-37. If an LED segment has an "8" displayed and the negative bias is removed from diodes F and C, what numeral will be displayed?

1. 1
2. 2
3. 3
4. 4

3-38. When replacing LED displays, which of the following methods should you use to ensure that the replacement display is of the same type as the faulty display?

1. A visual inspection
2. A check of the schematic symbols
3. Both 1 and 2 above
4. A check of the manufacturer's number

3-39. The photodiode acts as what type of electronic device?

1. Variable inductor
2. Variable resistor
3. Nonvariable inductor
4. Nonvariable resistor

3-40. When the photodiode is exposed to an external light, what happens to (a) resistance and (b) current?

1. (a) Increase (b) decreases
2. (a) Increases (b) increases
3. (a) Decreases (b) increases
4. (a) Decreases (b) decreases

3-41. To conduct, how must a photodiode be biased?

1. Reverse biased
2. Forward biased
3. Either 1 or 2 above, depending on light intensity

3-42. Photodiodes are useful in which of the following applications?

1. Computer card readers
2. Photographic light meters
3. Optic scanning equipment
4. Each of the above

3-43. Which of the following optoelectronic devices provides increased, conduction for a given light intensity?

1. LED
2. SCR
3. Phototransistor
4. Phototransformer

3-44. To compensate for ambient light, a phototransistor must have a total number of how many leads?

1. One
2. Two
3. Three
4. Four

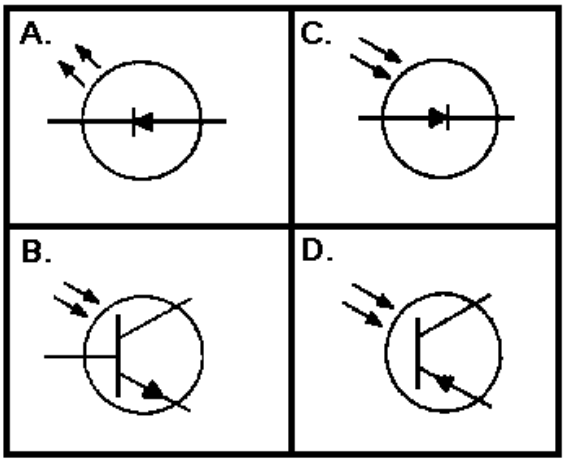

Figure 3F. —Solid-state schematic symbols.

IN ANSWERING QUESTIONS 3-45 THROUGH 3-47, SELECT FROM FIGURE 3-F THE SCHEMATIC SYMBOL IDENTIFIED IN THE QUESTION.

3-45. Schematic symbol for a photo-diode.

1. A
2. B
3. C
4. D

3-46. Schematic symbol for a two-terminal phototransistor.

1. A
2. B
3. C
4. D

3-47. Schematic symbol for a three-terminal phototransistor.

1. A
2. B
3. C
4. D

3-48. Which of the following devices is similar in operation to a photodiode?

1. Phototransistor
2. Photocell
3. LED
4. SCR

3-49. Which of the following is a typical light to dark resistance ratio of a photocell?

1. 1: 10
2. 1: 100
3. 1: 1000
4. 1:10,000

3-50. Photocells are used in which of the following circuits?

1. Controller
2. Oscillator
3. Amplifier
4. Detector

3-51. How should photovoltaic cells be coupled together to produce a relatively high voltage?

1. Series coupling
2. Parallel coupling
3. Inductive coupling
4. Mechanical coupling

3-52. What is the total number of terminals in a unijunction transistor (UJT)?

1. One
2. Two
3. Three
4. Four

3-53. The UJT has which of the following advantages over the conventional transistor?

1. Fewer terminals
2. Larger bandpass
3. Less bias is required
4. Increased temperature stability

3-54. How does the UJT differ from a conventional transistor?

1. The UJT has a second base instead of a collector
2. The UJT has a second emitter instead of a collector
3. The UJT has two collectors

3-55. When properly biased, what area(s) of the UJT act(s) as a resistor?

1. The area between base 1 and base 2
2. The area between emitter 1 and emitter 2
3. The area between collector 1 and collector 2
4. All of the above

3-56. The emitter of the UJT may be compared to what electronic component?

1. A fully charged capacitor
2. The wiper arm of a variable resistor
3. The collector of a conventional transistor
4. The secondary winding of a step-down transformer

3-57. What determines the level of voltage gradient at the emitter-base material contact point of a UJT?

1. The bias voltage
2. The manufacturer's specifications
3. The base area of the emitter
4. The voltage potential between base 2 and emitter

3-58. The UJT conducts from base 1 to (a) what point when it is forward biased and from (b) what point to bass 2 when it is reversed biased?

1. (a) Emitter (b) base 1
2. (a) Emitter (b) emitter
3. (a) Base 2 (b) base 1
4. (a) Base 1 (b) emitter

3-59. UJTs may be used in which of the following circuits?

1. Switching
2. Waveshaping
3. Oscillating
4. Each of the above

3-60. The field-effect transistor (FET) combines what desired characteristic of the vacuum tube with the many other advantages of the transistor?

1. Low output impedance
2. High output impedance
3. Low input impedance
4. High input impedance

3-61. What does the FET use to control the electrostatic field within the transistor?

1. Current
2. Voltage
3. Low input impedance
4. High input impedance

3-62. The junction field-effect transistor's (JFET) gate element corresponds very closely in operation with (a) what part of a conventional transistor and (b) what part of the vacuum tube?

1. (a) Emitter (b) cathode
2. (a) Base (b) grid
3. (a) Base (b) cathode
4. (a) Collector (b) plate

3-63. In the JFET, the portion of the bar between the deposit of gate material is of a smaller cross section than the rest of the bar. What does this cross section form?

1. A gate
2. A drain
3. A source
4. A channel

3-64. If a P-type material is used to construct the gate of a JFET, what material should be used to construct the remaining part of the JFET?

1. N-type
2. P-type
3. Mica type
4. Junction type

3-65. What is the key to FET operation?

1. The control of the effective cross-sectional area of the channel
2. The control of the effective cross-sectional area of the gate
3. Both 1 and 2 above
4. The low input impedance compared with the high output impedance

3-66. When reverse bias is applied to the gate lead of a JFET, what happens to (a) source-to-drain resistance of the device and (b) current flow?

1. (a) Decreases (b) decreases
2. (a) Decreases (b) increases
3. (a) Increases (b) decreases
4. (a) Increases (b) increases

3-67. What is the "pinch off" voltage of an FET?

1. The voltage required for the FET to conduct
2. The voltage required to overcome the FET reverse bias
3. The voltage required to reduce drain current to zero
4. The voltage required to reduce gate voltage to zero

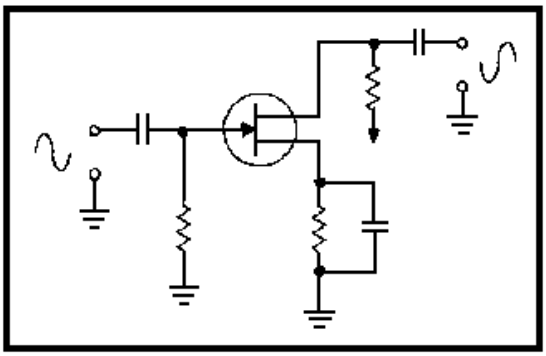

Figure 3G. —JFET common source amplifier.

IN ANSWERING QUESTIONS 3-68 AND 3-69, REFER TO FIGURE 3-G.

3-68. What type of transistor is shown in figure 3-G?

1. N channel JFET
2. P channel JFET
3. NPN/channel JFET
4. PNP/channel JFET

3-69. The circuit shown has which of the following characteristics?

1. Low impedance, high current gain
2. Low impedance, high voltage gain
3. High impedance, high current gain
4. High impedance, high voltage gain

3-70. The MOSFET has which of the following advantages over the JFET?

1. Less bias
2. Higher input impedance
3. Higher output impedance
4. All of the above

3-71. The MOSFET is normally constructed so that it operates in either the depletion mode or the enhancement mode. The depletion mode MOSFET (a) uses what type of bias and (b) has what type of doped channel to cause a depletion of current carriers in the channel?

1. (a) Reverse (b) lightly
2. (a) Forward (b) lightly
3. (a) Reverse (b) heavily
4. (a) Forward (b) heavily

3-72. The enhancement mode MOSFET (a) uses what type of bias and (b) has what type of doped channel to enhance the current carriers in the channel?

1. (a) Reverse (b) lightly
2. (a) Forward (b) lightly
3. (a) Reverse (b) heavily
4. (a) Forward (b) heavily

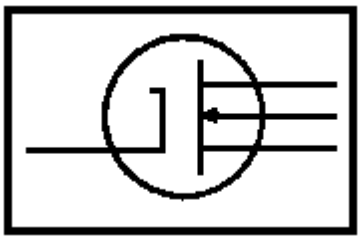

Figure 3H. —A MOSFET schematic symbol.

IN ANSWERING QUESTION 3-73, REFER TO FIGURE 3-H.

3-73. Which MOSFET element is identified by the arrow in the schematic symbol shown in figure 3-H?

1. Substrate
2. Source
3. Drain
4. Gate

3-74. What type metal is used in the construction of a MOSFET?

1. Oxide
2. Copper
3. Silver
4. Aluminum

3-75. What is the purpose of the shorting spring in a MOSFET?

1. To shunt the substrate to either the source or gate during operation
2. To protect the device from static electricity during replacement
3. To shunt the gates of a dual-gate MOSFET to make it operate like a single-gate MOSFET
4. To change the gain characteristics of the MOSFET

ASSIGNMENT 4

Textbook assignment: Chapter 4, "Solid-State Power Supplies," pages 4-1 through 4-62.

4-1. Which of the following is NOT one of the four sections of a basic power supply?

1. Transformer
2. Oscillator
3. Rectifier
4. Filter

4-2. The primary purpose of the transformer in an electronic power supply is to isolate the power supply from ground.

1. True
2. False

4-3. What is the primary function of the rectifier section?

1. To convert dc to ac
2. To convert ac to pulsating dc
3. To increase average voltage output
4. To decrease average voltage output

4-4. What is/are the functions of the filter section?

1. To eliminate dc voltage
2. To increase the amplitude of ac
3. To convert pulsating dc to steady dc
4. All of the above

4-5. The purpose of a center tap in a transformer is to provide

1. two separate dc voltages to the rectifier
2. a step-down voltage to the rectifier
3. pulsating dc to the rectifier
4. two equal voltages from one transformer

4-6. A diode is an ideal rectifier for which, if any, of the following reasons?

1. Current flows through the diode in one direction only
2. Current flows through the diode in both directions
3. Current will not flow through a diode
4. None of the above

4-7. When the anode of a diode is negative with respect to the cathode, the diode is said to be in what state?

1. Conduction
2. Saturation
3. Remission
4. Cutoff

4-8. In a simple half-way rectifier, the diode will conduct for a maximum of how many degrees of the 360-degree input signal?

1. 45
2. 90
3. 180
4. 270

4-9. What term is used to describe current pulses that flow in the same direction?

1. Average current
2. Secondary current
3. Pure direct current
4. Pulsating direct current

4-10. What is the ripple frequency of a half-wave rectifier with an input line frequency of 60 Hz?

1. 30 Hz
2. 60 Hz
3. 90 Hz
4. 120 Hz

4-11. In a half-wave rectifier, what is the average voltage output when the peak voltage is 300 volts?

1. 190.8 volts
2. 95.4 volts
3. 19.08 volts
4. 9.4 volts

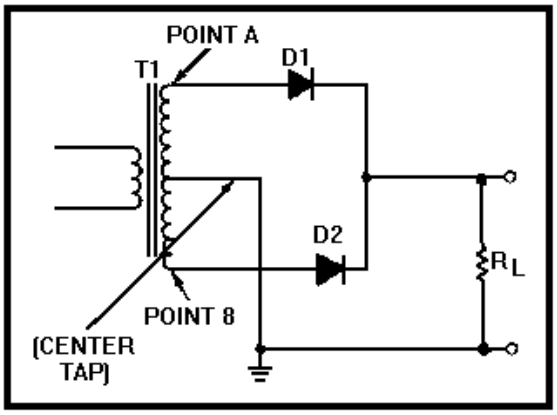

Figure 4A.—Complete full-wave rectifier.

IN ANSWERING QUESTIONS 4-12 AND 4-13, REFER TO FIGURE 4-A. ASSUME THAT THE VOLTAGE ACROSS THE TRANSFORMER SECONDARY (POINT A - POINT B) HAS AN RMS VALUE OF 480 VOLTS AC.

4-12. What is the peak value of the voltage pulse across the load?

1. 169.7 volts
2. 215.8 volts
3. 339.4 volts
4. 480 volts

4-13. What is the average load voltage?

1. 339.4 volts
2. 240 volts
3. 216 volts
4. 189.6 volts

4-14. What is the ripple frequency of a full-wave rectifier with an input line frequency of 60 Hz?

1. 30 Hz
2. 60 Hz
3. 90 Hz
4. 120 Hz

4-15. The full-wave rectifier has which of the following advantages over the half-wave?

1. Higher average voltage and current
2. Larger number of components
3. Higher value of voltage
4. Better regulation

4-16. What is the average voltage output of a full-wave rectifier that has an output of 100 volts peak?

1. 3.18 volts
2. 6.36 volts
3. 31.8 volts
4. 63.7 volts

4-17. The primary disadvantage of the conventional full-wave rectifier is that the peak output voltage is only one-half that of the half-wave rectifier.

1. True
2. False

THIS SPACE LEFT BLANK INTENTIONALLY.

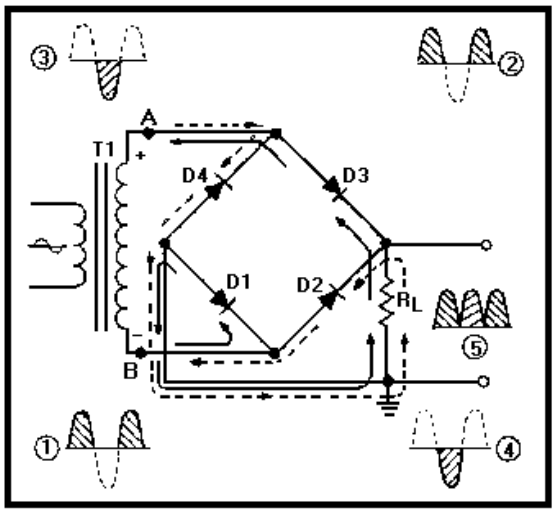

Figure 4B. —Bridge rectifier.

IN ANSWERING QUESTIONS 4-18 AND 4-19, REFER TO FIGURE 4-B.

4-18. When the voltage across the secondary of the transformer has the polarity shown, which of the diodes will conduct?

1. D1 and D3
2. D2 and D4
3. D1 and D2
4. D3 and D4

4-19. When the polarity reverses, which of the diodes will conduct?

1. D3 and D1
2. D4 and D2
3. D2 and D1
4. D4 and D3

4-20. In filter circuits, inductors are used as what type of impedance(s)?

1. Shunt impedance to oppose changes in current
2. Shunt impedances to oppose changes in voltage
3. Series impedances to oppose changes in current
4. Series impedances to oppose changes in voltage

4-21. To retain its charge, the capacitor in a simple capacitor filter must have a long charge time constant and a short discharge time constant.

1. True
2. False

4-22. If you increase the value of a capacitor, the X_C will increase.

1. True
2. False

4-23. To obtain a steady dc output in a simple capacitor circuit, the capacitor must charge almost instantaneously to the value of the applied voltage.

1. True
2. False

4-24. Which of the following factors, if any, determines the rate of discharge of the capacitor in a filter circuit?

1. The value of the load resistance
2. The amount of voltage
3. The type of capacitor
4. None of the above

4-25. A half-wave rectifier has an output frequency of 60 hertz, a filter capacitor value of 40 microfarads, and a load resistance of 10 kilohms. What is the value of X_C?

1. 133.3 ohms
2. 26.5 ohms
3. 66.3 ohms
4. 40.0 ohms

4-26. A full-wave rectifier has an output frequency of 120 hertz, a filter capacitor value of 25 microfarads, and a load resistance of 10 kilohms.What is the value of X_C?

1. 5.3 ohms
2. 53 ohms
3. 106 ohms
4. 1060 ohms

4-27. What type of filter is the most basic power supply filter?

1. Capacitor
2. LC choke-input
3. LC capacitor-input
4. RC capacitor-input

4-28. In a circuit with a capacitor filter, how is the capacitor connected?

1. In series with the load
2. In parallel with the load
3. In series with the input
4. Both 2 and 3 above

4-29. The LC choke-input filter is used primarily where which of the following types of regulation is/are important?

1. Frequency
2. Current only
3. Voltage only
4. Voltage and Current

4-30. In an LC choke-input filter circuit, the capacitor charges only to the average value of the input voltage. What component inhibits the capacitor from reaching the peak value of the input voltage?

1. The diode
2. The capacitor
3. The filter choke
4. The load resistor

4-31. In an LC choke-input filter, the larger the value of the filter capacitor, the better the filtering action. Which of the following factors represents the major limitation in obtaining the maximum value of the capacitor used?

1. Cost
2. Reliability
3. Availability
4. Physical size

4-32. What is the most common range of values, in henries, for a power supply choke?

1. 1 to 20
2. 5 to 25
3. 25 to 30
4. 10 to 200

4-33. If the impedance of the choke in an LC choke-input filter is increased, the ripple will

1. increase
2. decrease
3. oscillate
4. remain the same

4-34. A full-wave rectifier has an output frequency of 120 hertz, a filter choke with a value of 10 henries, and a load resistance of 10 kilohms. What is the value of X_L?

1. 75 ohms
2. 7.5 ohms
3. 75 kilohms
4. 7.5 kilohms

4-35. The filter capacitor in the LC choke-input filter is NOT subject to extreme voltage surges because of the protection provided by what component?

1. Shunt capacitor
2. Series resistor
3. Load resistor
4. Inductor

4-36. Shorted turns in the choke of an LC choke-input filter may reduce the value of inductance below the critical value. When this happens, which of the following problems may occur?

1. Poor voltage regulation
2. Excessive ripple amplitude
3. Abnormally high output voltage
4. Each of the above

4-37. The use of the RC capacitor-input filter is limited to which of the following situations?

1. When the load current is large
2. When the load current is small
3. When the load voltage is large
4. When the load voltage is small

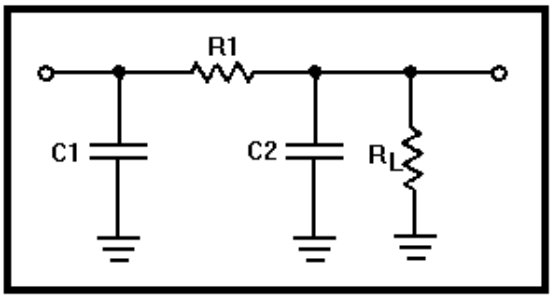

Figure 4C.—RC capacitor-input filter.

IN ANSWERING QUESTIONS 4-38 AND 4-39, REFER TO FIGURE 4-C.

4-38. Which of the components will have the highest failure rate?

1. C1
2. C2
3. R1
4. R_L

4-39. Which of the components provides protection against voltage surges in the circuit?

1. C1
2. C2
3. R1
4. R_L

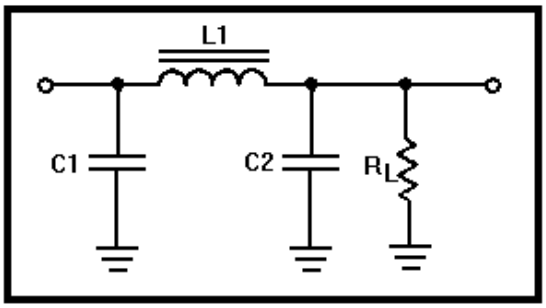

Figure 4D.—LC Capacitor-input filter.

IN ANSWERING QUESTIONS 4-40 AND 4-41, REFER TO FIGURE 4-D.

4-40. Components L1 and C2 form what type of circuit?

1. Ac voltage doubler
2. Dc voltage doubler
3. Ac voltage divider
4. Dc voltage divider

4-41. If component L1 shorts to the core, which of the following conditions will result?

1. Low output ripple frequency
2. Excessive ripple frequency
3. Excessively high output
4. No output

4-42. In a voltage regulator, what percent of regulation would be ideal?

1. 1 %
2. 5 %
3. 3 %
4. 0 %

IN ANSWERING QUESTIONS 4-43 THROUGH 4-45, REFER TO THE FOLLOWING FORMULA:

$$\text{Percent of Regulation} = \frac{E_{\text{no load}} - E_{\text{full load}}}{E_{\text{full load}}} \times 100$$

4-43. If a power supply produces 30 volts with no load and 25 volts under full load, what is the percent of regulation?

1. 5
2. 10
3. 20
4. 30

4-44. If a power supply produces 10 volts with no load and 9 volts under full load, what is the percent of regulation?

1. 8
2. 9
3. 10
4. 11

4-45. If a power supply produces 20 volts with no load and 20 volts under full load, what is the percent of regulation?

1. 1
2. 2
3. 3
4. 0

4-46. Basic voltage regulators are classified as either series or shunt. Their classification is determined by which of the following factors?

1. The type of regulating device used
2. The type of regulation required
3. The amount of regulation required
4. The position of the regulating device in relation to the load (R_L)

4-47. The simple series voltage regulator was designed to function as what type of resistance?

1. Fixed resistance in series with the load
2. Fixed resistance in parallel with the load
3. Variable resistance in series with the load
4. Variable resistance in parallel with the load

4-48. A series voltage regulator is designed so that what total percentage of current flows through the regulating device?

1. 25
2. 50
3. 75
4. 100

4-49. When a series voltage regulator is used to control output voltages, any increase in input voltage results in a/an

1. decrease in the voltage drop across the load resistance
2. increase in the voltage drop across the Zener diode
3. decrease in the resistance of the regulating device
4. increase in the resistance of the regulating device

THIS SPACE LEFT BLANK INTENTIONALLY.

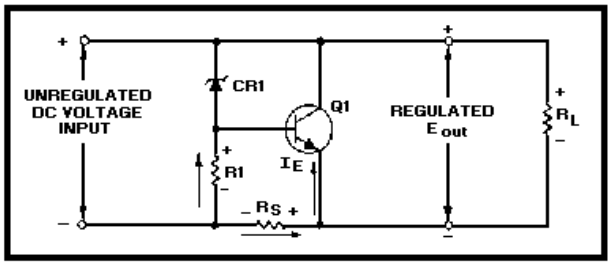

Figure 4E.—Simple shunt voltage regulator.

IN ANSWERING QUESTIONS 4-50 THROUGH 4-52, REFER TO FIGURE 4-E.

4-50. The base-emitter bias across Q1 is determined by which of the components?

1. R1 and CR1
2. R1 and R_S
3. R_S and CR1
4. R_S and R_L

4-51. What, if anything, happens to the forward bias of Q1 when the input voltage increases?

1. It increases
2. It decreases
3. Nothing, it remains the same

4-52. When the load current increases and the output voltage momentarily drops, what, if anything, happens to the resistance of Q1?

1. It increases to compensate for the drop
2. It decreases to compensate for the change
3. Nothing, it remains the same

4-53. What type of ammeter reading indicates that current regulator is functioning properly?

1. Constant
2. Deflection in the negative direction
3. Deflection in the positive direction
4. Fluctuation around the center line

4-54. A major disadvantage of having good current regulation is that good voltage regulation is lost.

1. True
2. False

4-55. To maintain a constant current flow when there is an increase in the load resistance (R_L), variable resistance (R_V) must compensate for this change by

1. increasing its resistance
2. decreasing its resistance
3. remaining the same

4-56. A decrease in the forward bias of a base-emitter junction has which of the following effects on the resistance of a transistor?

1. It increases
2. It deceases
3. It remains the same

4-57. Voltage multipliers are used primarily to develop what type of voltage?

1. Low voltage where low current is required
2. Low voltage where high current is required
3. High voltage where low current is required
4. High voltage where high current is required

4-58. The classification of voltage multipliers depends on which of the following ratios?

1. Input current to output current
2. Input current to output voltage
3. Output voltage to input voltage
4. Input voltage to output current

4-59. A half-wave voltage doubler consists of what total number of half-wave rectifiers?

1. One
2. Two
3. Three
4. Four

4-60. If a half-wave rectifier circuit is added to a half-wave voltage doubler circuit, what will be the resulting circuit?

1. A voltage doubler
2. A voltage tripler
3. A voltage quadruplet
4. A voltage quintuplet

4-61. Which of the following methods is used by manufacturers of electronic equipment to reduce the cost of extensive wiring?

1. Grounding the output of the power supply to the chassis
2. Grounding the return side of the power transformer to the chassis
3. Connecting all components in parallel
4. Connecting all components in series

4-62. When working on electronic equipment, the technician should observe which of the following safety precautions?

1. Make certain that the electronic equipment is properly grounded
2. Make certain that the test equipment is properly grounded
3. Make certain that the rubber mats are in good condition
4. All of the above

4-63. Which of the following is/are the most widely used check(s) for testing electronic equipment?

1. Smoke
2. Visual
3. Signal tracing
4. Both 2 and 3 above

4-64. Any connection that is located close to the chassis or to any other terminal should be examined for the possibility of which of the following problems?

1. An open
2. A short
3. A low resistance
4. A high resistance

4-65. Which of the following statements applies to a transformer that is discolored or leaking?

1. It is operational
2. It is cracked
3. It is shorted
4. It is open

4-66. As a technician, you notice that a resistor is discolored and charred. Which, if any, of the following conditions most likely caused the damage?

1. Overload
2. Open circuit
3. Ambient temperature
4. None of the above

4-67. You are in the process of energizing a power supply. You hear a boiling or sputtering noise and notice smoke coming from a section of the power supply. Which, if any, of the following actions should you take first?

1. Secure the power immediately
2. Examine the problem area
3. Remove the defective component
4. None of the above

4-68. Which, if any, of the following is the most rapid and accurate method for testing electronic circuits after completing visual inspection?

1. Smoke test
2. Current test
3. Signal tracing
4. None of the above